Engström Carestation
User's Reference Manual
Software Version 4.X

User Responsibility

This Product will perform in conformity with the description thereof contained in this User's Reference manual and accompanying labels and/or inserts, when assembled, operated, maintained, and repaired in accordance with the instructions provided. This Product must be checked periodically. A defective Product should not be used. Parts that are broken, missing, plainly worn, distorted, or contaminated should be replaced immediately. Should repair or replacement become necessary, Datex-Ohmeda recommends that a telephonic or written request for service advice be made to the nearest Datex-Ohmeda Customer Service Center. This Product or any of its parts should not be repaired other than in accordance with written instructions provided by Datex-Ohmeda and by Datex-Ohmeda trained personnel. The Product must not be altered without the prior written approval of Datex-Ohmeda. The user of this Product shall have the sole responsibility for any malfunction which results from improper use, faulty maintenance, improper repair, damage, or alteration by anyone other than Datex-Ohmeda.

CAUTION U.S. Federal law restricts this device to sale by or on the order of a licensed medical practitioner. Outside the U.S.A., check local laws for any restriction that can apply.

Datex-Ohmeda products have unit serial numbers with coded logic which indicates a product group code, the year of manufacture, and a sequential unit number for identification. The serial number can be in one of two formats.

AAA**X**11111	AAA**XX**111111AA
The **X** represents an alpha character indicating the year the product was manufactured; **H** = 2004, **J =** 2005, etc. **I** and **O** are not used.	The **XX** represents a number indicating the year the product was manufactured; **04** = 2004, **05** = 2005, etc.

Engström, Carestation, ComWheel, D-fend, SpiroDynamics, and ***INview*** are registered trademarks of Datex-Ohmeda, Inc.

Other brand names or product names used in this manual are trademarks or registered trademarks of their respective holders.

Table of Contents

1 Introduction

What is an Engström Carestation? 1-2
Symbols used in the manual or on the equipment 1-3
Abbreviations 1-6
Conventions used 1-9
Hard keys 1-9

2 System Controls and Menus

Ventilator overview 2-2
Display controls and indicators 2-6
Menu keys 2-7
Ventilator display 2-8
Using menus 2-10
Menus 2-14
Select Patient menu 2-14
Patient Setup menus 2-15
Alarms Setup menu 2-17
System Setup menus 2-18
Parameters Setup menus 2-19
Spirometry menus 2-22
Procedures menus 2-23
Nebulizer menu 2-23
Trends menu 2-24
Screen configuration 2-24

3 Setup and Connections

General use 3-2
Power connection 3-3
Module bay connection 3-4
Gas supply connections 3-5
Communication port 3-6
Port 4 Communication 3-6
Nurse call 3-7
Electronic micropump nebulizer 3-8
Assembling the nebulizer 3-8
Filling the nebulizer 3-10
Disassembling the nebulizer 3-10
Auxiliary pressure 3-10
Purging of tubing 3-11
Zeroing 3-11
Humidifier mount (optional) 3-12
Support arm (optional) 3-14
Isolated electrical outlets (optional) 3-15
Electrical outlet panel ratings 3-15
EVair 03 compressor (optional) 3-16
Before each use 3-18

4 Operation and Tutorial

Preparing the ventilator for a patient 4-2
Turning on the system 4-2
Select Patient 4-2
Pre-use checkout 4-3
Testing alarms 4-4
Patient weight 4-6
Patient ID 4-7
Vent Setup 4-7
Ventilation preferences 4-9
Selecting a data source 4-14
Starting ventilation 4-15

Entering Standby 4-16
Turning the system off 4-16
Monitoring 4-16
Changing settings while ventilating 4-17
Ventilation settings 4-17
Ventilation preferences 4-17
Alarm limits 4-17
Using snapshots 4-18
Taking a snapshot 4-18
Viewing a snapshot 4-18
Viewing trends 4-19
Trends split screen 4-19
Viewing spirometry loops 4-20
Sensor type 4-20
Spirometry menu 4-21
Using the cursor 4-21
Spirometry split screen 4-21
Performing procedures 4-22
↑ O2 4-22
Suction 4-22
Nebulizer 4-23
Manual Breath 4-23
Intrinsic PEEP 4-24
PEEPi Volume 4-24
P 0.1 4-24
Inspiratory Hold 4-25
Expiratory Hold 4-25
Spontaneous Breathing Trial (SBT) 4-26
EVair 03 compressor operation 4-27

5 Airway Modules

Compact airway modules 5-2
D-fend water trap 5-4
Connection to a patient 5-4
Gas exchange 5-6
Measurement limitations 5-6
Patient spirometry 5-7
Measurement principles 5-7
Static measurements 5-7
Gas calibration 5-8

6 Alarms and Troubleshooting

Alarms 6-2
Alarm priorities 6-2
Display changes during alarms 6-3
Internal failure 6-3
Backup audio buzzer 6-3
List of alarms 6-4
Troubleshooting 6-10

7 Cleaning and Maintenance

System status 7-2
Repair policy 7-2
Maintenance summary and schedule 7-3
User maintenance 7-3
Battery performance test 7-3
Datex-Ohmeda approved service 7-4
EVair 03 compressor maintenance 7-4
Airway module preventive maintenance 7-4
Clean and sterilize 7-5
Cleaning 7-5
Sterilization 7-5
Other cleaning and sterilizing agents 7-6
Expiratory flow sensor 7-7

Exhalation valve housing 7-7
Fan filters 7-8
Aeroneb Pro nebulizer 7-10
Support arm 7-11
Expiratory water trap 7-12
EVair 03 compressor 7-12
Airway module components 7-13

8 Theory of Operation

Ventilation theory 8-2
Ventilating in Backup mode 8-2
Modes 8-3
Setting families 8-3
Volume controlled ventilation (VCV) 8-4
Pressure controlled ventilation (PCV) 8-6
Pressure controlled ventilation - volume guaranteed (PCV-VG) 8-8
Synchronized intermittent mandatory ventilation - volume controlled (SIMV-VC) 8-10
Synchronized intermittent mandatory ventilation - pressure controlled (SIMV-PC) 8-12
BiLevel airway pressure ventilation (BiLevel) 8-14
Continuous positive airway pressure/pressure support ventilation (CPAP/PSV) 8-16
Synchronized intermittent mandatory ventilation - pressure controlled volume guaranteed (SIMV-PCVG) 8-18
BiLevel airway pressure ventilation - volume guaranteed (BiLevel-VG) 8-20
Electrical operation 8-22
Display Unit (DU) 8-23
Ventilator Control Board (VCB) 8-24
Ventilation Monitoring Board (VMB) 8-24
Power Management Board (PMB) 8-24
Motherboard 8-24
Monitoring Module Power Supply Board 8-24
Pneumatic operation 8-25

Inspiratory 8-26
Expiratory 8-27
Hazard protection 8-27

9 Parts

Exhalation valve assembly 9-2
AC power cords 9-3
System accessories 9-4
System parts 9-5
Neonatal flow sensor 9-5
Airway module parts and accessories 9-6
EVair 03 compressor parts 9-6

10 Installation Mode

Install/Service menu 10-2
Menus 10-3
Default menus 10-9
Calibration menus 10-10

11 Specifications

Physical specifications 11-2
Environmental specifications 11-2
Pneumatic specifications 11-2
Electrical specifications 11-3
Battery information 11-3
Ventilation operating specifications 11-5
Ventilation delivery specifications 11-5
Ventilation settings 11-5
Waveforms 11-7
Nebulizer 11-7
Tidal volume delivery 11-7
Inspired pressure control 11-8
PEEP control 11-8
Oxygen - air mixing accuracy 11-8
Inspiratory and expiratory resistance 11-8

Ventilator monitoring specifications 11-9
Measurements 11-9
Alarm settings 11-10
Airway module specifications 11-10
Gas specifications 11-10
Typical performance 11-11
EVair 03 compressor 11-12
Specifications 11-12
Compressor pneumatic diagram 11-13
Compressor electrical block diagram 11-14
Electromagnetic compatibility (EMC) 11-15
Guidance and manufacturer's declaration - electromagnetic emissions 11-15
Guidance and manufacturer's declaration - electromagnetic immunity 11-16
Recommended separation distances 11-18
Electrical safety 11-19
IEC-60601-1 Classification 11-19

12 INview ventilation tools

FRC 12-2
FRC theory 12-2
Performing FRC 12-2
FRC INview scaling 12-4
PEEP INview 12-5
FRC Log 12-7
SpiroDynamics 12-8
SpiroDynamics theory 12-8
Setting up SpiroDynamics 12-10
Viewing SpiroDynamics 12-11
Using the cursor 12-12
Lung INview 12-13
Using Lung INview 12-13
Troubleshooting 12-15
Alarms 12-16

13 Neonatal Option

Neonatal ventilation 13-2
Theory of operation 13-2
Symbols 13-3
Neonatal flow sensor 13-3
Connecting the flow sensor 13-4
Turning the flow sensor off 13-4
Calibrating the flow sensor 13-5
Cleaning the flow sensor 13-6
Preparing the ventilator for a patient 13-7
Select Patient menu 13-7
Pre-use checkout 13-7
Testing alarms 13-8
Patient weight 13-8
Ventilation preferences menu 13-8
Performing procedures 13-9
↑ O2 and suction 13-9
Nebulizer 13-9
INview ventilation tools 13-9
Alarms 13-10
Troubleshooting 13-11
Trends 13-11
Graphical trends 13-11
Neonatal specifications 13-12
Ventilation operating specifications 13-12
Ventilation delivery specifications 13-12
Ventilator monitoring specifications 13-13

Index

Warranty

1 Introduction

In this section

What is an Engström Carestation? 1-2
Symbols used in the manual or on the equipment 1-3
Abbreviations 1-6
Conventions used 1-9

What is an Engström Carestation?

The Engström Carestation (EC) is a critical care ventilator that is flexible and physically adaptable to a variety of work environments. It has an intuitive user interface that is common to many Datex-Ohmeda products. A wide selection of performance options gives the user full control of the system configuration. The Engström Carestation is a complete system featuring patient monitoring, patient ventilation, and the capability of interfacing with central monitoring.

Note Photos and drawings shown in this manual may not be identical to all variants of the product. Some photos and drawings show accessories and options that may not be present or available on all variants. This manual does not cover the operation of every accessory; refer to the accessory documentation for further information.

The EC must only be operated by authorized medical personnel well trained in the use of this product, for patient ventilation in the intensive care environment. It must be operated according to the instructions in this User's Reference manual.

The ventilator is designed to be used with infant through adult patients with a body weight of 5 kg or greater. If the neonatal option is installed on the ventilator, patients weighing down to 0.5 kg may be ventilated with the EC. The EC is designed to maintain lung ventilation in the absence of spontaneous breathing effort as well as in support of the patient's existing spontaneous breathing effort. The system is designed for facility use, including within-facility transport, and should only be used under the orders of a clinician.

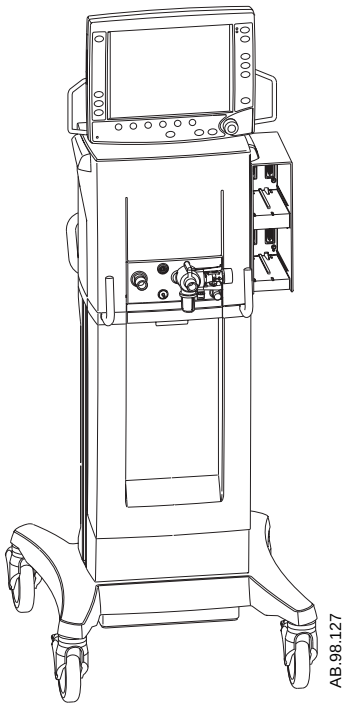

Figure 1-1 • Engström Carestation (EC)

The Carestation consists of three main components: a display, a ventilator unit, and an optional module bay. The display allows the user to interface with the system and control settings. The ventilator unit controls electrical power, nebulization, and pneumatic gas flow to and from the patient. The module bay allows the integration of various patient monitoring modules with the ventilator.

Optional accessories include an air compressor, airway modules, module bay, support arm, humidifier and water trap mounting brackets, auxiliary electrical outlets, and a neonatal flow sensor.

Symbols used in the manual or on the equipment

Symbols replace words on the equipment, on the display, or in Datex-Ohmeda manuals.

Warnings and Cautions tell about the dangerous conditions that can occur if the instructions in the manual are not followed.

Warnings tell about a condition that can cause injury to the operator or the patient.

Cautions tell about a condition that can cause damage to the equipment. Read and follow all warnings and cautions.

	On (power)		Off (power)
	On for part of the equipment		Off for part of the equipment
	Standby		Caution: federal law prohibits dispensing without prescription.
	Type BF equipment		Type B protection against electrical shock
	Attention, refer to product instructions IEC 60601-1		Caution, ISO 7000-0434
REF	Stock number	**SN**	Serial number
	Direct current		Alternating current
	Earth ground		Protective earth ground
	Equipotential connector		Fuse

	Lock
	Unlock
	Variability
	Variability in steps
+	Plus, positive polarity
-	Minus, negative polarity
	Movement in one direction
	Movement in both directions
	This way up
	Warning, dangerous voltage
	Pneumatic inlet
	Pneumatic outlet
	Electrical input
	Electrical output
	Inspiratory port
	Expiratory port
	Electrical testing certification
	Inspiratory breath identifier
	Serial port
	Module data indicator
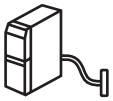	Module bay port
	Electronic micropump nebulizer
Paux	Auxiliary pressure port
	Display signal input/output
	No battery/battery failure
	Battery in use. Bar indicates amount of battery power remaining.
	Silence alarms
	Submenu
	Hourmeter
	Drain outlet
AIR	Air
	Pump

Heavy object

USB port

Ethernet connection

Network ID connection
(Datex-Ohmeda proprietary port)

Autoclavable

Not autoclavable

Authorized representative in the European Community

Systems with this mark agree with the European Council Directive (93/42/EEC) for Medical Devices when they are used as specified in their User's Reference Manuals. The xxxx is the certification number of the Notified Body used by Datex-Ohmeda's Quality Systems.

Date of Manufacture

Neonatal option is installed

SpiroDynamics option is installed

Functional Residual Capacity option is installed

Maximum

Neonatal patient type

Pediatric patient type

Adult patient type

Indicates that the waste of electrical and electronic equipment must not be disposed as unsorted municipal waste and must be collected separately. Please contact an authorized representative of the manufacturer for information concerning the decommissioning of equipment.

GOST R Russian certification

Manufacturer

Abbreviations

Abbreviation	Definition
A	
ATPD	Ambient temperature pressure dry
B	
BiLevel	BiLevel airway pressure ventilation
BiLevel-VG	BiLevel airway pressure, volume guaranteed
BSA	Body surface area
BTPS	Body temperature pressure saturated
C	
Compl	Compliance
CPAP/PSV	Continuous positive airway pressure/pressure support ventilation
E	
EC	Engström Carestation
EE	Energy expenditure
ET	End-tidal concentration
$EtCO_2$	End-tidal carbon dioxide
EtO_2	End-tidal oxygen
F	
F-V	Flow-Volume loop
FI	Fraction of inspired gas
FI-ET	Difference between inspiratory and expiratory concentrations
FiO_2	Fraction of inspired oxygen
FRC	Functional residual capacity
I	
I:E	Inspiratory-expiratory ratio
Insp Pause	Inspiratory pause time
K	
kg	kilogram

Abbreviation	Definition
M	
ml	milliliters
MVexp	Expired minute volume
MVexp/wt	Expired minute volume per patient weight
MVinsp	Inspired minute volume
N	
Neo	Neonatal
O	
O_2	Oxygen
P	
P 0.1	Airway occlusion pressure
P Vol	PEEPi volume
P-F	Pressure-Flow loop
P-V	Pressure-Volume loop
Pair	Air supply pressure
Paux	Auxiliary pressure
Paw	Airway pressure
Pbaro	Barometric pressure
PCV	Pressure controlled ventilation
PCV-VG	Pressure controlled ventilation - volume guaranteed
Ped	Pediatric patient
Pedi	Pedi-lite sensor
PEEP	Positive end expiratory pressure
PEEPe	Extrinsic positive end expiratory pressure
PEEPe+i	Total positive end expiratory pressure
PEEPi	Intrinsic positive end expiratory pressure
Pexp	Expiratory pressure
Phigh	High-pressure setting for BiLevel
Pinsp	Inspiratory pressure
Plimit	High pressure limit
Plow	Low-pressure setting for BiLevel

Abbreviation	Definition
Pmax	Maximum pressure
Pmean	Mean pressure
PO_2	Oxygen supply pressure
Ppeak	Peak pressure
Pplat	Plateau pressure
Psupp	Support pressure
R	
Rate	Respiratory rate
Raw	Airway resistance
RQ	Respiratory quotient
RR	Respiratory rate
RSBI	Rapid shallow breathing index
S	
SBT	Spontaneous breathing trial
SIMV-PC	Synchronized intermittent mandatory ventilation - pressure controlled
SIMV-PCVG	Synchronized intermittent mandatory ventilation - pressure controlled, volume guaranteed
SIMV-VC	Synchronized intermittent mandatory ventilation - volume controlled
T	
Thigh	Time setting for high pressure in BiLevel
Tlow	Time setting for low pressure in BiLevel
TV	Tidal volume
TVexp	Expired tidal volume
TVexp/wt	Expired tidal volumer per patient weight
TVinsp	Inspired tidal volume

Abbreviation	Definition
V	
VCO_2	Carbon dioxide production
VCV	Volume controlled ventilation
VO_2	Oxygen consumption
VO_2/kg	Oxygen consumption per kilogram
VO_2/m^2	Oxygen consumption per square meter
Vol	Volume
Vol/wt	Volume per patient weight

Conventions used

Hard keys

Names of the hard keys on the display and modules are written in bold typeface; for example, **Normal Screen**.

Menu selections

Menu selections are written in bold italic typeface; for example, ***Patient Setup***.

Messages

Messages that are displayed on the screen are enclosed in single quotes; for example, ‘Check sample gas out.’

Sections and headings

When referring to different sections or headings in the User’s Reference manual, the name is written in italic typeface and is enclosed in double quotes; for example, *“System Controls and Menus.”*

2 System Controls and Menus

In this section

Ventilator overview 2-2
Display controls and indicators 2-6
Menu keys 2-7
Ventilator display 2-8
Using menus 2-10
Menus 2-14
Screen configuration 2-24

Ventilator overview

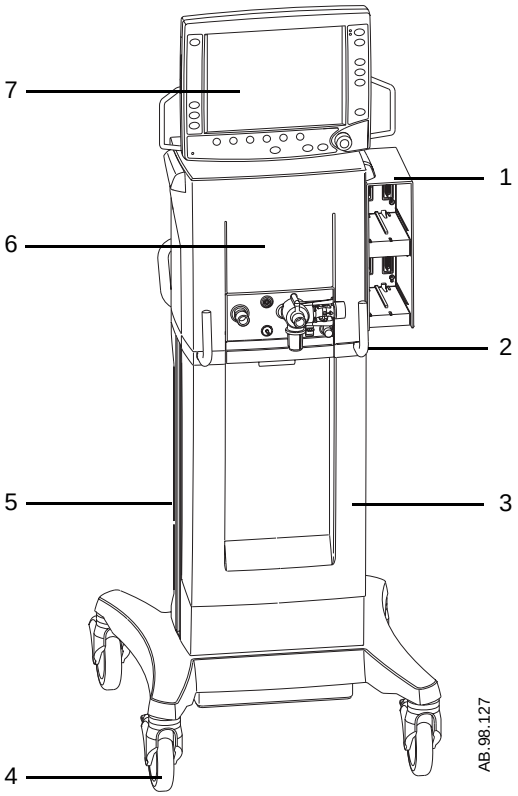

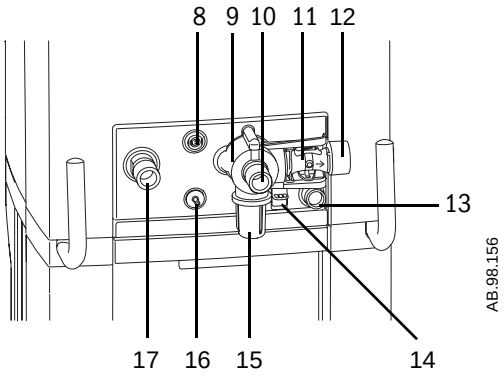

1. Module bay (optional)
2. Ventilator lock*
3. Cart
4. Caster*
5. Dovetail rails
6. Ventilator unit
7. Display
8. Nebulizer connection
9. Exhalation valve housing*
10. Expiratory inlet
11. Expiratory flow sensor
12. Gas exhaust port
13. Leak test plug
14. Exhalation valve housing latch*
15. Water trap*
16. Auxiliary pressure port
17. Inspiratory outlet

Figure 2-1 • Front view of the EC

*These items are described in further detail in the following table.

Item, Figure 2-1		Description
2	Ventilator lock	There is a lock on one side of the ventilator cart. Pull latch out and lift ventilator up to remove. Caution: Ventilator unit is heavy. 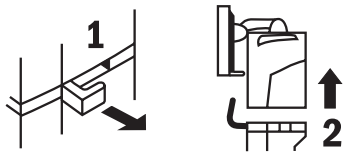
4	Caster	Press down to lock. Lift up to release.
9, 14	Exhalation valve housing and latch	To remove, press down on the latch to release the exhalation valve housing. Pull housing off ventilator. 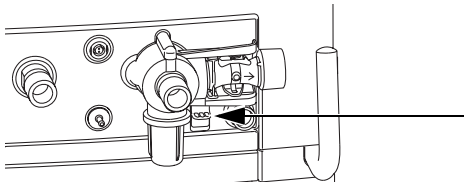 To reinsert, place the tab of the housing (1) into the groove (2) and push the housing into position. Gently pull on the housing to make sure it is securely latched. 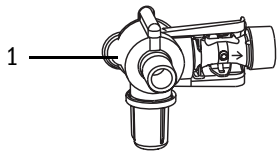 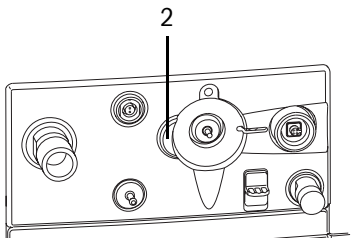
15	Water trap	Unscrew water trap to remove. Empty contents and replace water trap.

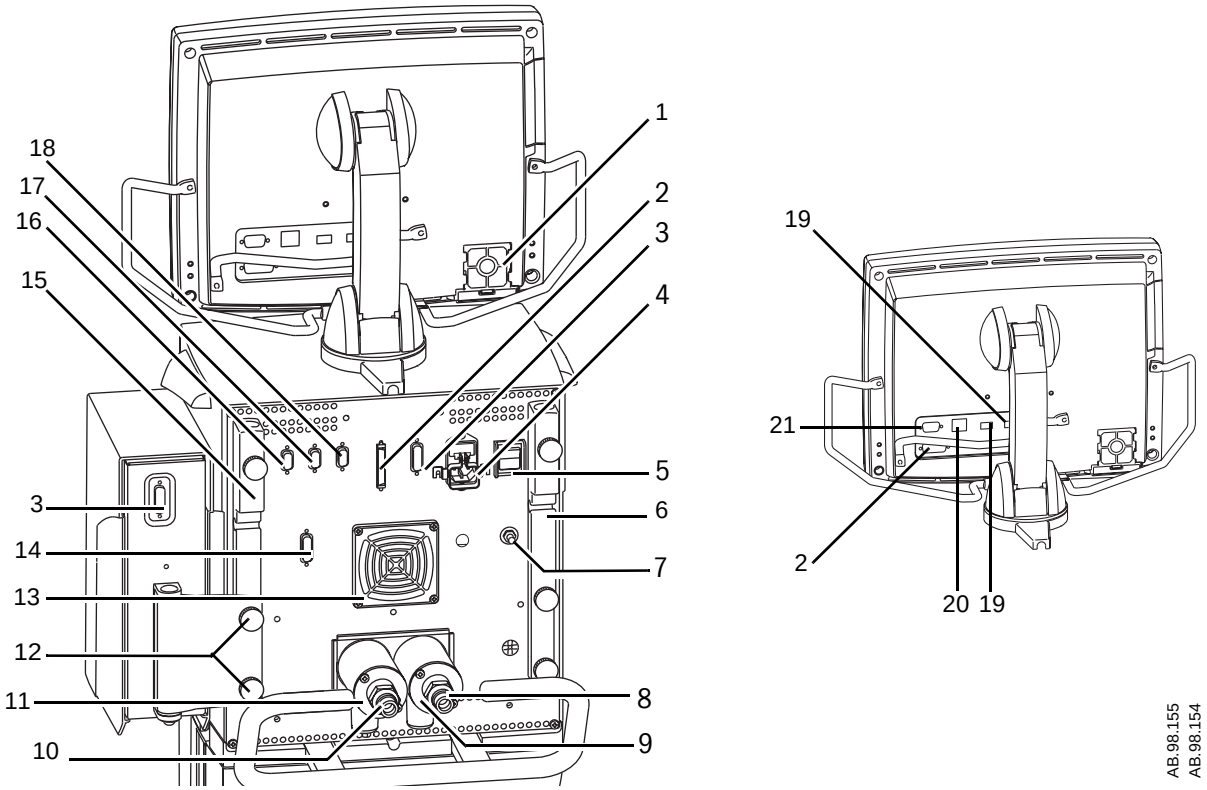

1. Display fan filter
2. Display connection
3. Module bay connection
4. AC mains inlet and fuse holder
5. System switch*
6. Retaining channel
7. Equipotential connector
8. Oxygen supply connection (pipeline)
9. O2 high-pressure inlet filter (optional)
10. Air supply connection (pipeline or compressor)
11. Air high-pressure inlet filter
12. Module bay mounting thumbscrews*
13. Ventilator unit fan filter
14. Serial communication port (Port 4)
15. Arm holder*
16. Neonatal flow sensor connection (Port 1)
17. Port 2 (not currently supported)
18. Port 3 (not currently supported)
19. USB port (not currently supported)
20. Ethernet connection (not currently supported)
21. Remote monitor on/standby (not currently supported)

Figure 2-2 • Back view of the EC

*These items are described in further detail in the following table.

Item, Figure 2-2		Description
5	System switch	Set the switch to the On position to power up the ventilator. The system may only be turned off when in Standby.
12	Module bay mounting thumbscrews	The module bay may be placed on either side of the ventilator. To move: 1. Remove connector from back of module bay, and pull cable out of the retaining channel. 2. Loosen the thumbscrews. 3. Slide module bay off thumbscrews. 4. Place the module bay on the other side of the ventilator. 5. Tighten the thumbscrews. 6. Insert the cable into the opposite retaining channel by starting at the inside edge and pushing the remainder of the cable through. 7. Connect the cable to the module bay connection. Ensure there is enough excess cable on the end of the module bay to allow full movement of the module bay.
15	Arm holder	The arm may be placed on either side of the ventilator. To move: 1. Loosen the thumbscrew. 2. Lift arm out of holder. 3. Place the arm on the other side of the ventilator. 4. Tighten the thumbscrew.

Display controls and indicators

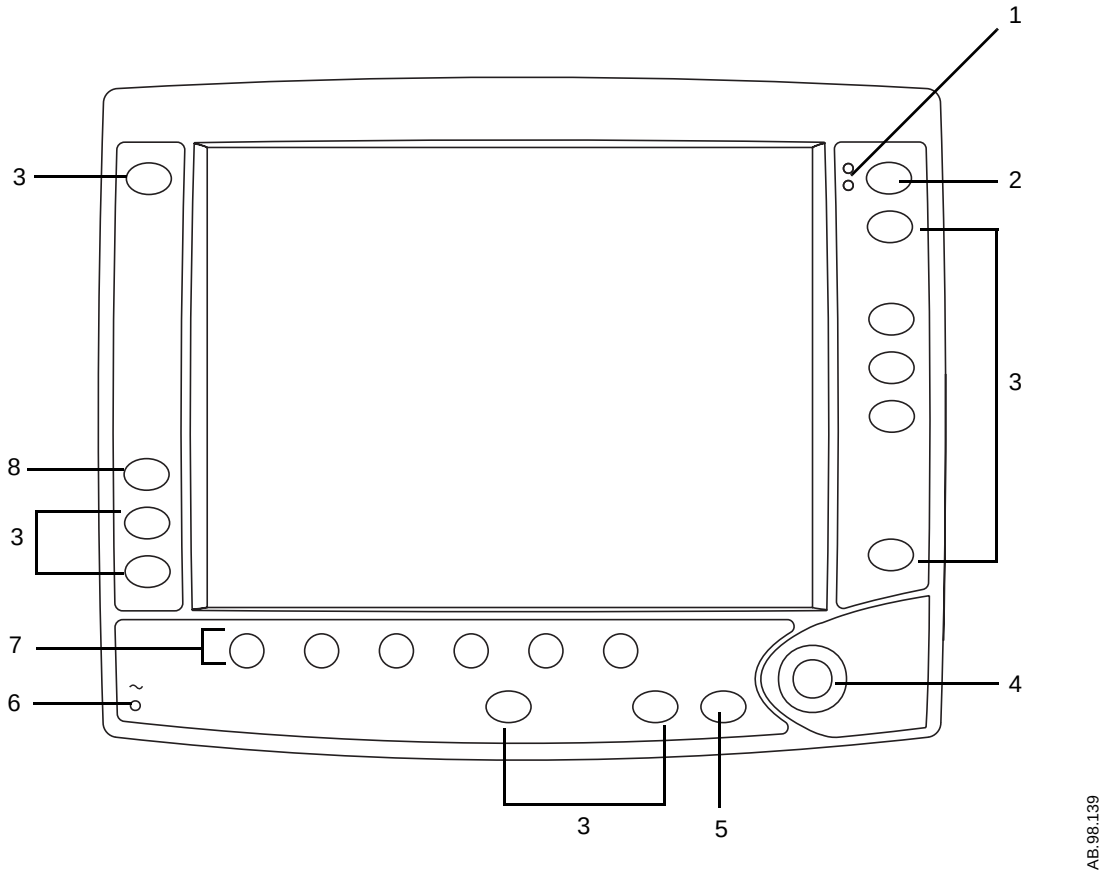

1	Alarm LEDs	The red and yellow LEDs indicate the priority of active alarms.
2	Silence Alarms key	Push to silence any active, silenceable high and medium priority alarms or to suspend any non-active high or medium priority alarms. Alarm audio is silenced for 120 seconds for Adult, Pediatric, and Neonatal patient types. Alarm Audio is suspended for 120 seconds for Adult and Pediatric patient types, and for 30 seconds for Neonatal patient type. Push to clear resolved alarms.
3	Menu keys	Push to show corresponding menu.
4	ComWheel	Push to select a menu item or confirm a setting. Turn clockwise or counterclockwise to scroll menu items or change settings.
5	Normal Screen key	Push to remove all menus from the screen.
6	AC mains indicator	The green LED lights continuously when the EC is connected to an AC mains source. The internal batteries are charging when the LED is lit.
7	Quick keys	Push to change corresponding ventilator setting. Turn the ComWheel to make a change. Push the Quick key or ComWheel to activate the change.
8	↑ O2 key	Push to deliver 100% O_2 for 2 minutes.

Figure 2-3 • Controls and indicators

Menu keys

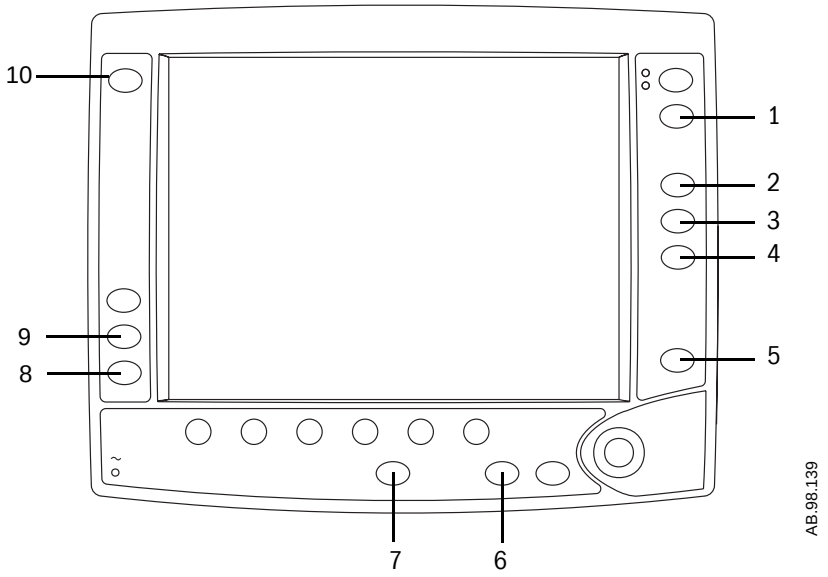

1	Alarms Setup	Used to view and adjust the alarm limits as well as the volume of the audible alarm.
2	Help	Use to view information about alarms.
3	Trends	Used to view historical patient data and ventilator settings either numerically or graphically.
4	Take Snapshot	Used to record the waveforms, alarms, and measured and set values. A maximum of three snapshots can be held in the memory.
5	System Setup	Used to view system status and access various setup menus.
6	Spirometry	Used to view patient ventilation data graphically in the form of loops based on pressure, flow, and volume data.
7	Vent Setup	Used to select ventilation mode and adjust all ventilation settings for each mode.
8	Procedures	Used to select specific procedures such as Intrinsic PEEP and P 0.1.
9	Nebulizer	Used to perform patient nebulization based on volume and time settings.
10	Standby	Used to place the ventilator in Standby mode and to start ventilation when the system is in Standby mode.

Figure 2-4 • Menu keys

Ventilator display

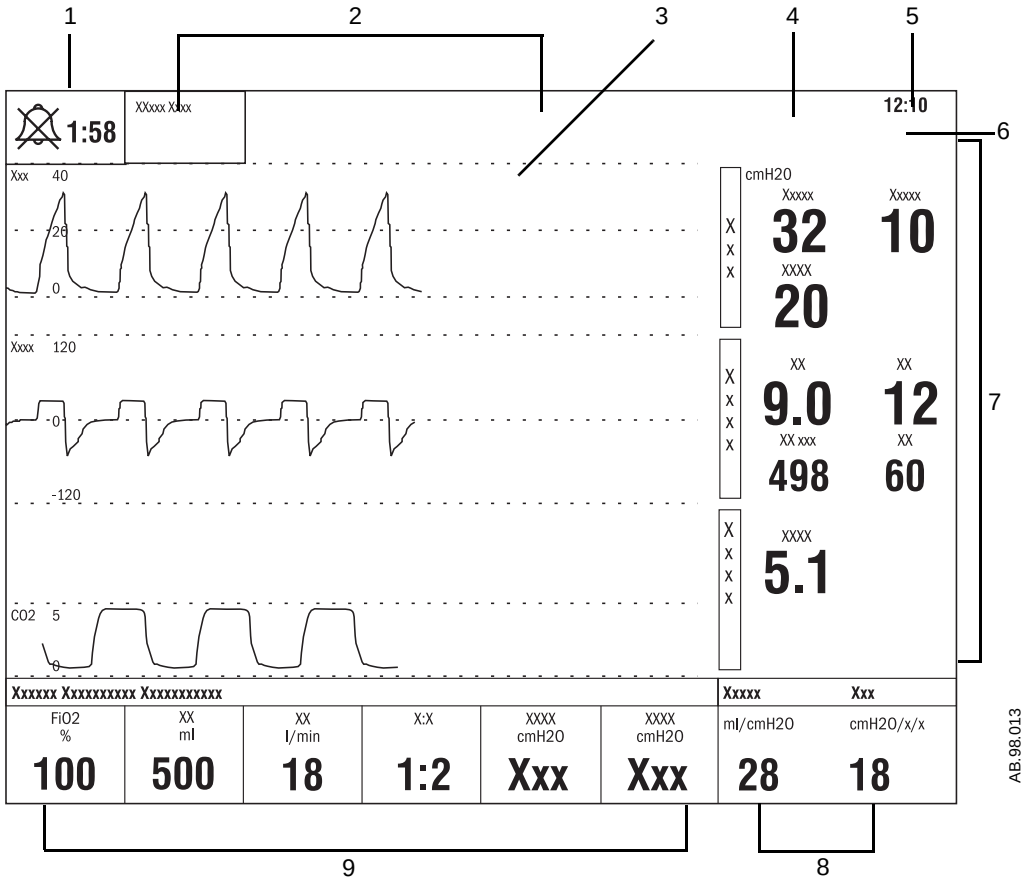

1	Alarm silence symbol and countdown	Displays the time remaining during an alarm silence or alarm suspend period.
2	Alarm message fields	Alarms will appear in order of priority. Refer to *"Alarms and Troubleshooting"* for more information on alarm behavior.
3	Waveform fields	The top two waveforms are permanently set to Paw and Flow. The third waveform may be selected as CO_2, O_2, Vol, Paux, or Off.
4	General message field	Displays informational messages.
5	Clock	The time may be set in 12 or 24 hour format in the Time and Date menu.
6	Patient type icon	Displays Neonatal, Pediatric, or Adult patient type mode.
7	Measured value fields	Displays current measured values corresponding to the waveforms.
8	Digit field	Displays information related to Volume, CO_2, O_2, Compliance, Metabolics, Spirometry, or Volume per Weight.
9	Ventilator settings	Displays several of the settings for the current mode of ventilation.

Figure 2-5 • Normal Screen view

When a menu key is selected the waveform fields start at the right edge of the menu. The entire waveform is always displayed.

When the information in the measured data field is invalid, the numbers will be displayed as '- - -'.

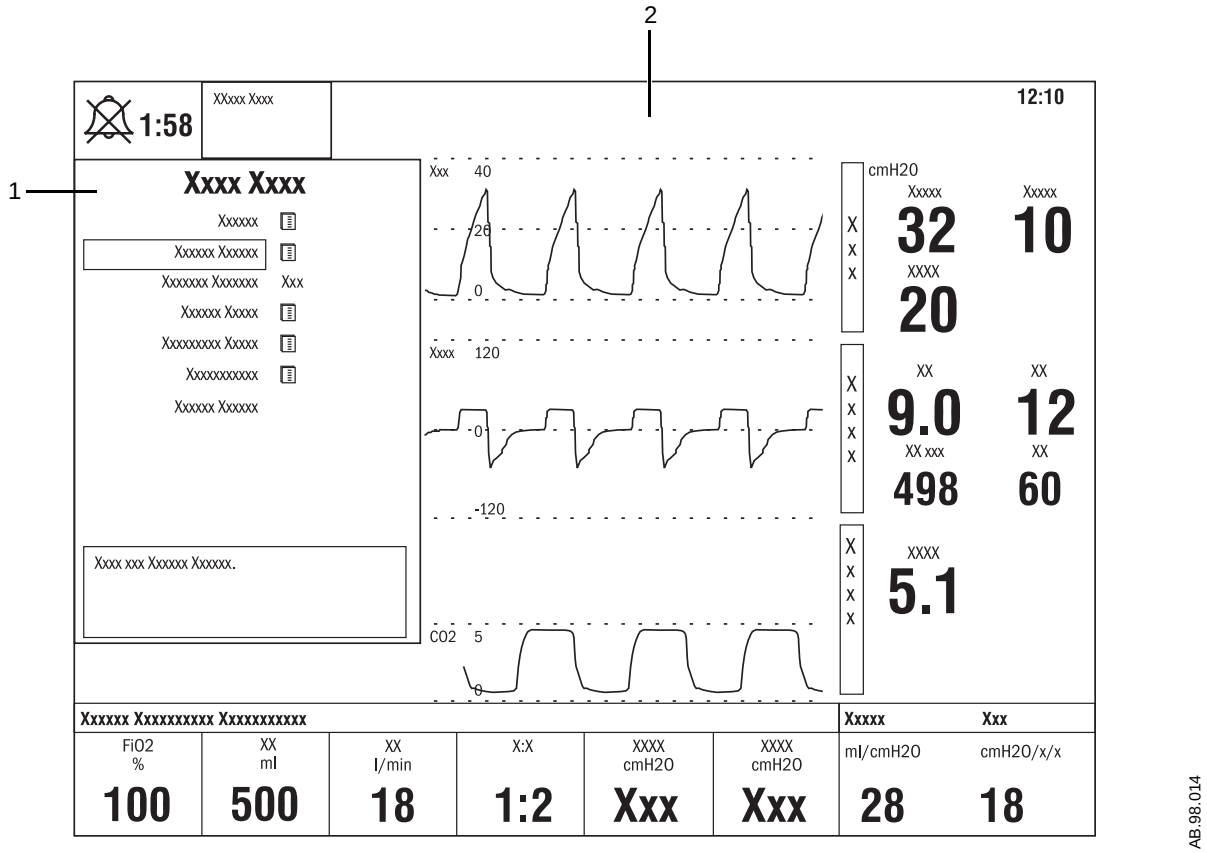

1. Menu
2. Waveform fields

Figure 2-6 • Menu view

Using menus

Menu functionality is common across the ventilator interface. The following describes how to navigate through and select menu functions.

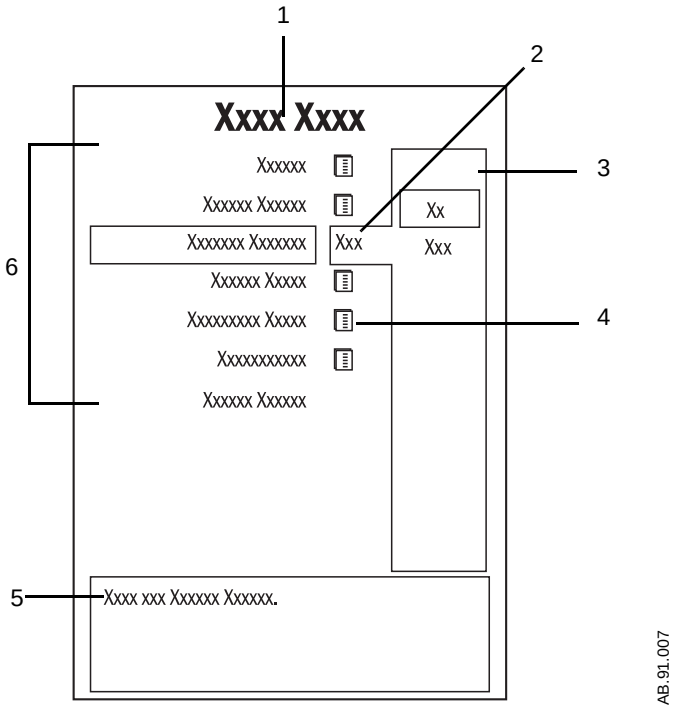

1. Menu title
2. Present selection
3. Adjustment window
4. Submenu
5. Short instructions
6. Menu selections

Figure 2-7 • Example menu

1. Push a menu key to display the corresponding menu.

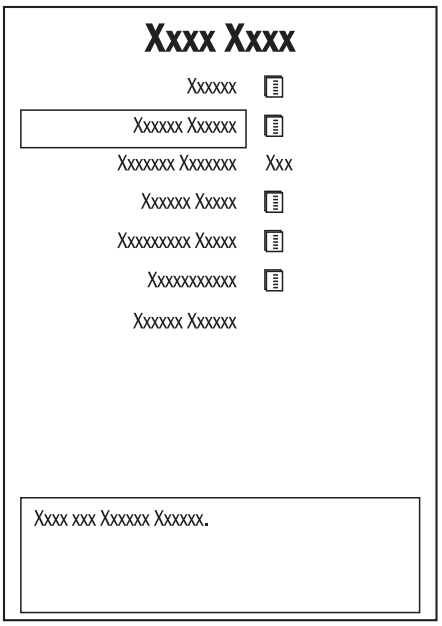

2. Turn the ComWheel counterclockwise to highlight the next menu item. Turn the ComWheel clockwise to highlight the previous menu item.

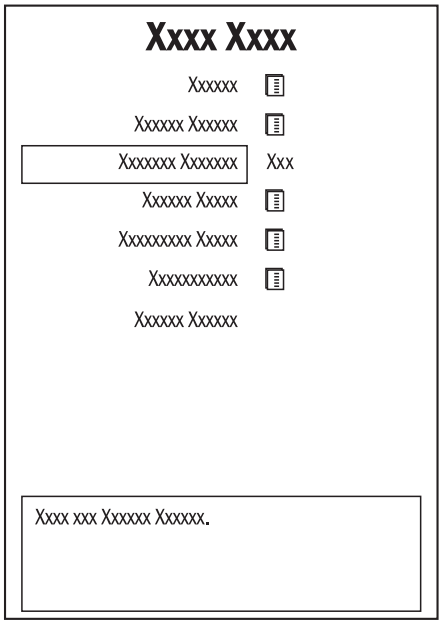

3. Push the ComWheel to enter the adjustment window or a submenu.

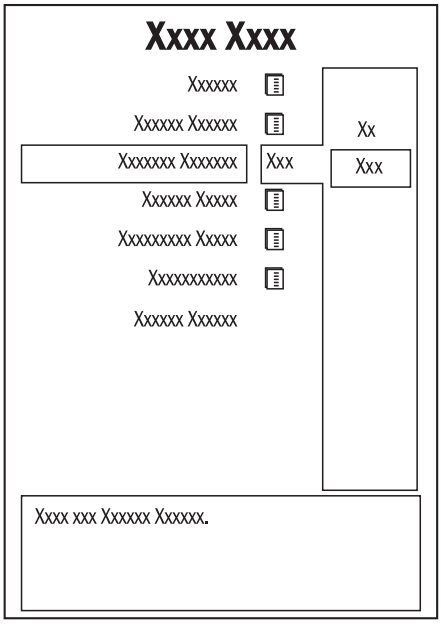

4. Turn the ComWheel clockwise or counterclockwise to highlight the desired selection.

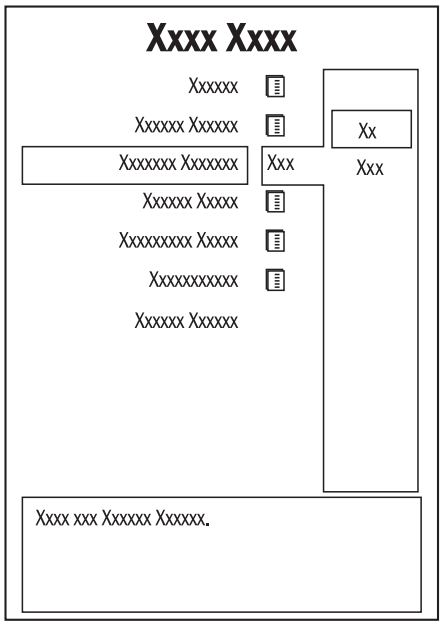

5. Push the ComWheel to confirm the selection.

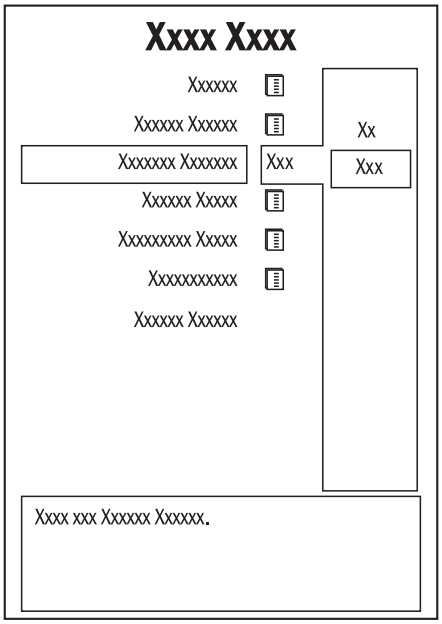

AB.91.006

6. Select ***Normal Screen*** in the menu or push the **Normal Screen** key to exit the menu and return to the normal ventilation display. (Select ***Previous Menu*** to return to the last displayed menu, if available.)

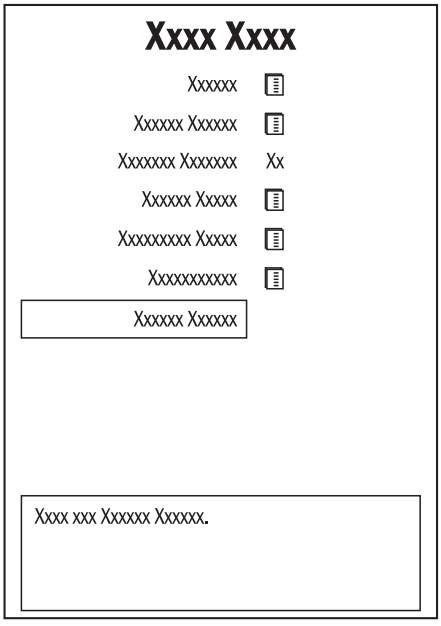

AB.91.009

Menus

The following is a list of the menu selections available. For functional descriptions of menu items, refer to *“Operation and Tutorial”* or *“Theory of Operation.”*

Menu selections shown below are the factory default values. The additional settings are to the right of the menu item.

Select Patient menu

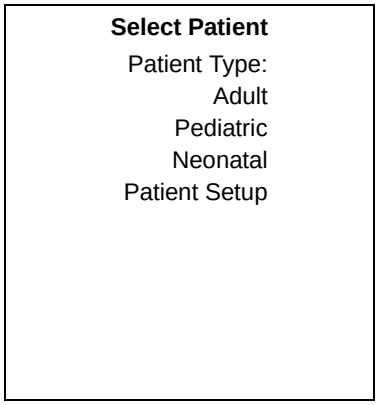

Patient Setup menus

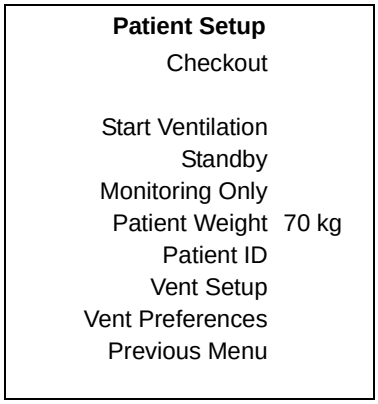

0.5 to 7 kg, 1 to 15 lb for Neo, 5 to 200 kg, 10 to 440 lb for Ped and Adult

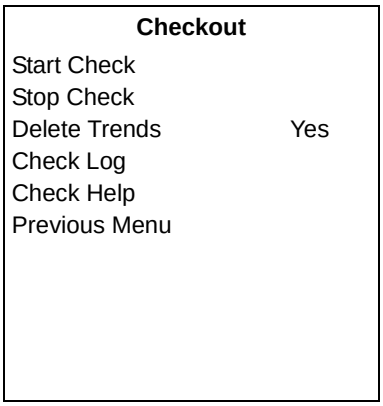

Yes or No

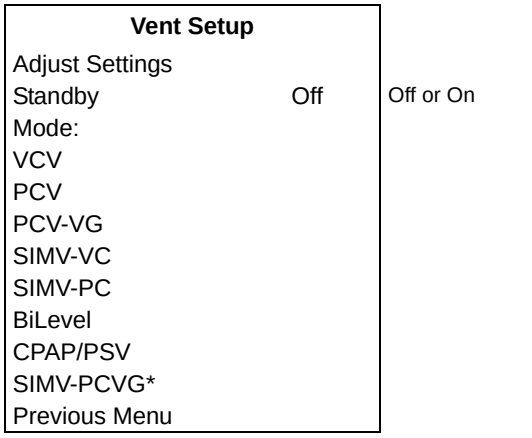

*SIMV-PCVG or BiLevel-VG modes will display in this location if they are installed.

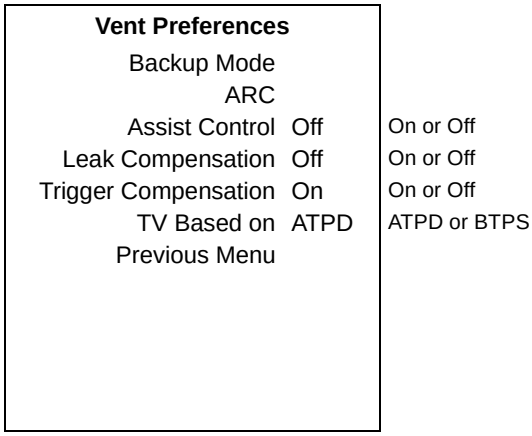

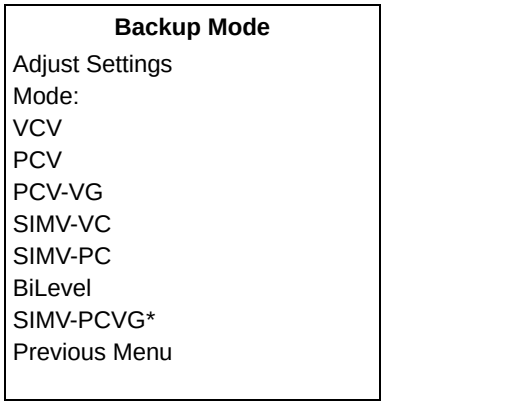

*SIMV-PCVG or BiLevel-VG modes will display in this location if they are installed.

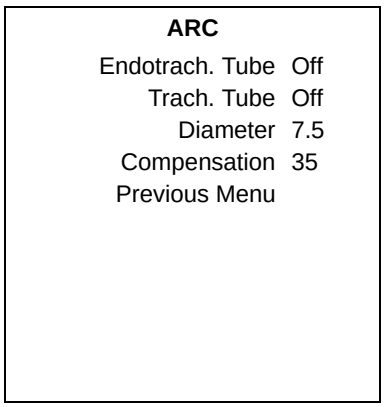

Alarms Setup menu

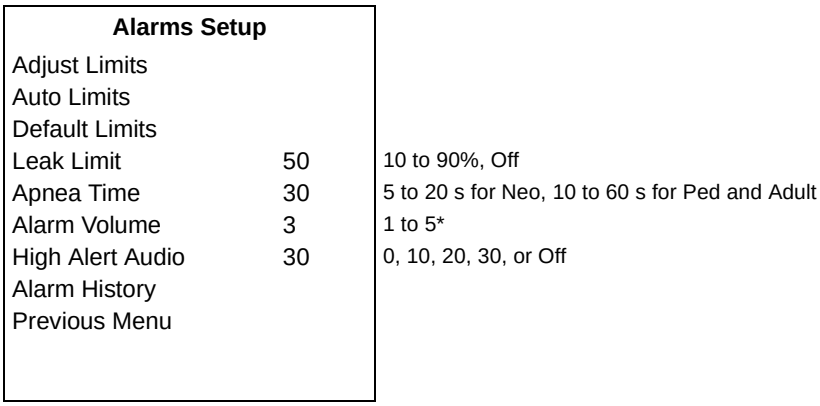

System Setup menus

System Setup	
Patient Setup	
Screen Setup	
Neo Flow Sensor Setup	
Parameters Setup	
System Status	
Install/Service	Refer to *"Installation Mode"*
Normal Screen	

Screen Setup		
Wave Field 1	Paw	
Wave Field 2	Flow	
Wave Field 3	Vol	Off, CO2, O2, Vol or Paux
Digit Field	Compl	Vol, CO2, O2, Compl, Spiro, EE/RQ, VO2, or Vol/Wt
Split Screen	None	None, Spiro, SBT, or Trend
Sweep Speed	Fast	Fast or Slow
Brightness	4	1 to 5
Previous Menu		

Parameters Setup menus

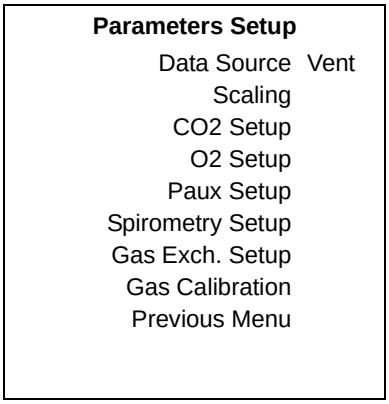

Vent or Mod

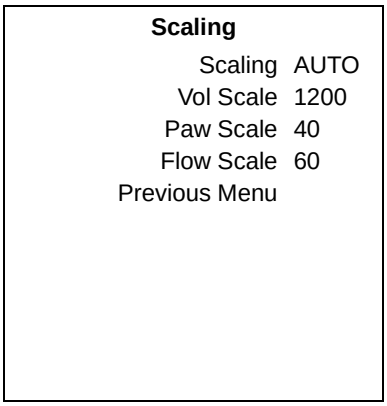

AUTO, Linked or Indep

6 to 360 for Neo, 60 to 2400 for Ped, 300 to 4000 for Adult

2 to 120 for Neo, 6 to 120 for Ped, 10 to 140 for Adult

1 to 60 for Neo, 6 to 120 for Ped, 15 to 200 for Adult

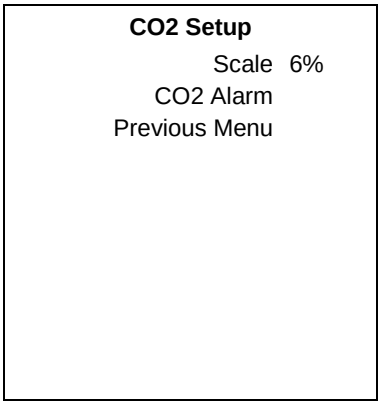

AUTO, or 6 to 20%

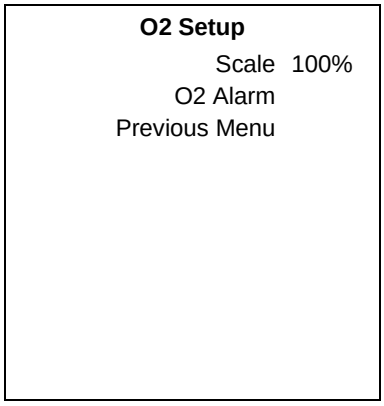

AUTO, or DIFF6 to DIFF30, 10-60%, 100%

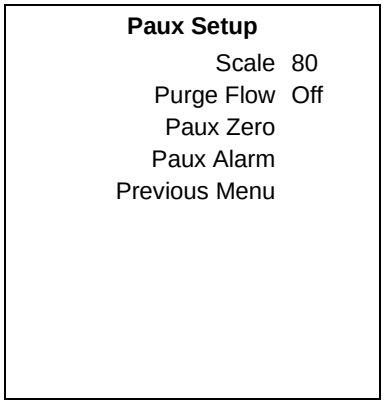

AUTO, or 6 to 110

Off or On

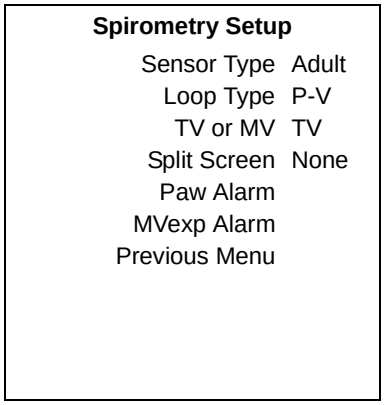

Adult or Pedi

P-V, F-V, P-F

TV or MV

None, Spiro, SBT, or Trend

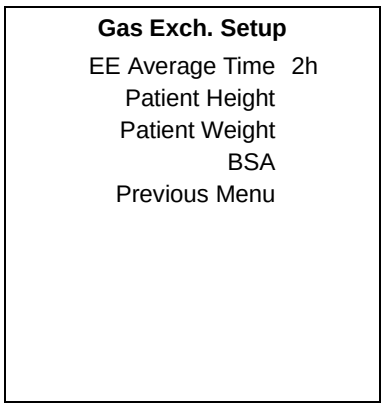
Gas Exch. Setup
EE Average Time 2h
Patient Height
Patient Weight
BSA
Previous Menu
2, 6, 12, 24h
5 to 98 in, 15 to 250 cm
5 to 200 kg, 10 to 440 lb
0.05 to 3.74

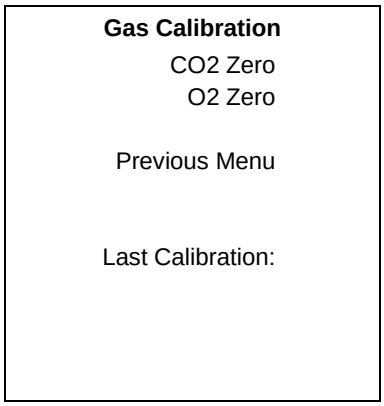
Gas Calibration
CO2 Zero
O2 Zero
Previous Menu
Last Calibration:

Spirometry menus

Spirometry		
Loop Type	P-V	P-V, F-V, or P-F
Cursor		
Scaling		
Spiro Setup		
Save Loop		
Reference Loop	None	None or time of saved loops
Erase Loop	None	None or time of saved loops
FRC INview		
SpiroDynamics		
Normal Screen		

Scaling		
Scaling	AUTO	AUTO, Linked or Indep
Vol Scale	1200	6 to 360 for Neo, 60 to 2400 for Ped, 300 to 4000 for Adult
Paw Scale	40	2 to 120 for Neo, 6 to 120 for Ped, 10 to 140 for Adult
Flow Scale	60	1 to 60 for Neo, 6 to 120 for Ped, 15 to 200 for Adult
Previous Menu		

Spirometry Setup		
Sensor Type	Adult	Adult or Pedi
Loop Type	P-V	P-V, F-V, P-F
TV or MV	TV	TV or MV
Split Screen	None	None, Spiro, SBT, or Trend
Paw Alarm		
MVexp Alarm		
Previous Menu		

Procedures menus

Procedures
Manual Breath
Suction
Intrinsic PEEP
PEEPi Volume
P 0.1
Inspiratory Hold
Expiratory Hold
Spont. Breath. Trial
Normal Screen

SBT		
Adjust Settings		
Time	30	2 to 120 min
Start		
Stop		
Adopt		
Split Screen	None	None, Spiro, SBT, or Trend
Previous Menu		

Nebulizer menu

Nebulizer		
Start		
Stop		
Volume	3.0	2.5, 3.0, 5.0, or 6.0 ml
Time	15	10, 15, 20, or 30 min
Cycles	1	1 to 10
Pause Time	1	0.5 to 480 min
Next Start		
Normal Screen		

Trends menu

Trends		
Cursor		
Next Page		
View:		
Graphical		
Snapshot		
Numerical		
Settings		
Time Scale	2 h	1 to 72 h
Normal Screen		

Screen configuration

To change the ventilator display:

1. Push **System Setup**.
2. Select ***Screen Setup***.
3. Select field to be changed.
4. Select parameter to be displayed.
5. Select ***Previous Menu*** when complete.

3 Setup and Connections

In this section

General use 3-2
Power connection 3-3
Module bay connection 3-4
Gas supply connections 3-5
Communication port 3-6
Electronic micropump nebulizer 3-8
Auxiliary pressure 3-10
Humidifier mount (optional) 3-12
Support arm (optional) 3-14
Isolated electrical outlets (optional) 3-15
EVair 03 compressor (optional) 3-16

General use

WARNING Use of portable phones or other radio frequency (RF) emitting equipment near the system may cause unexpected or adverse operation. Monitor operation when RF emitters are in the vicinity.

⚠ Use of other electrical equipment on or near this system may cause interference. Verify normal operation of equipment in your configuration before use on patients.

⚠ Do not attach a gas scavenging system or other accessories to the gas exhaust port. Occluding the gas exhaust port will prevent proper ventilation of the patient.

⚠ Adding attachments or other components to the breathing system may increase the inspiratory or expiratory resistance. Ensure the inspiratory and expiratory resistances do not exceed 6 cmH_2O for the following flows:

- 60 l/min for adult use
- 30 l/min for pediatric use
- 5 l/min for neonatal use

CAUTION Use only cables and accessories approved by Datex-Ohmeda. Other cables and accessories may damage the system or interfere with measurement. Single-use accessories are not designed to be reused.

⚠ Datex-Ohmeda strongly recommends the use of at least two gas sources during clinical use.

Facility defaults for various parameters may be set in the Installation mode. Refer to *"Installation Mode"* section for more information.

Connect the patient circuit, including the humidifier (if used), patient wye (Y-piece), water trap, and filters as shown.

Important Consult your hospital guidelines for proper use of expiratory filters in conjunction with heated humidifiers.

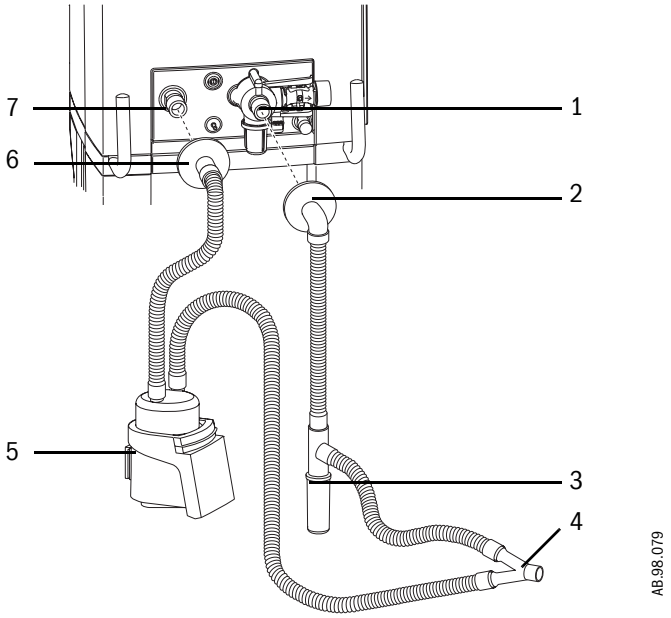

1. Expiratory inlet
2. Expiratory filter (optional)
3. Expiratory water trap (optional)
4. Patient wye (Y-piece)
5. Humidifier (optional)
6. Inspiratory filter (recommended)
7. Inspiratory outlet

Figure 3-1 • Patient circuit connections

Note Datex-Ohmeda recommends the use of an inspiratory filter at all times and an expiratory water trap when an active humidifier without a heated expiratory limb is used.

Power connection

The power cord is connected on the back of the ventilator as shown. The input power is less than 200 W.

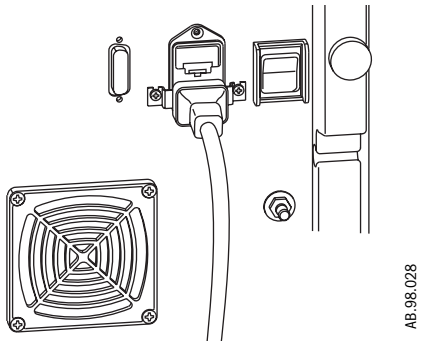

Module bay connection

The module bay may be mounted on either side of the ventilator.

1. Lock the casters.
2. Connect one end of the cable to the module bay connection on the back of the ventilator, and tighten the screws.
3. Attach the module bay to the desired side of the ventilator.
   - Loosen the thumbscrews.
   - Slide the module bay behind the thumbscrews and tighten.
4. Insert the cable into the retaining channel by starting at the inside edge and pushing the remainder of the cable through.
5. Connect the other end of the cable to the module bay connection, and tighten the screws.
6. Ensure there is enough excess cable on the end of the module bay to allow full movement of the module bay.

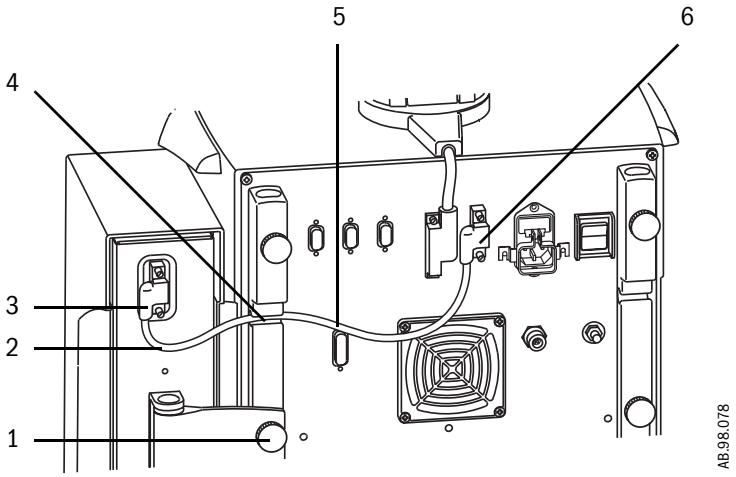

1. Thumbscrew
2. Excess cable
3. Module bay connection
4. Retaining channel
5. Module bay cable
6. Ventilator module bay connection

Figure 3-2 • Module bay connection

Gas supply connections

CAUTION Use only clean and dry medical oxygen and air supplies.

The oxygen and air supply connections are located on the back of the ventilator. The air supply connection is on the left and the oxygen supply connection is on the right, as labelled on the ventilator.

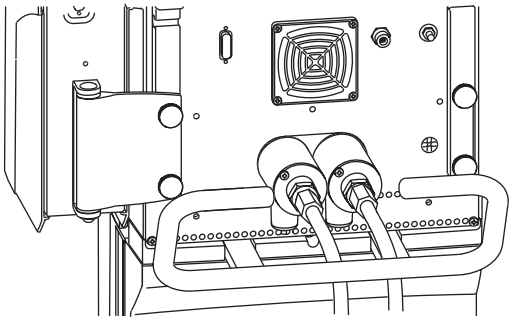

Communication port

WARNING Port 4 interface cables must be shielded.

Refer to the *"Electrical safety"* section of *"Specifications"* for precautions on connecting to this communications port.

Port 4 Communication

The Port 4 connector allows serial input/output of commands and data. The 15 pin connector is located on the back of the ventilator, and labelled as port 4. The output protocol is available at www.datex-ohmeda.com or by contacting Datex-Ohmeda.

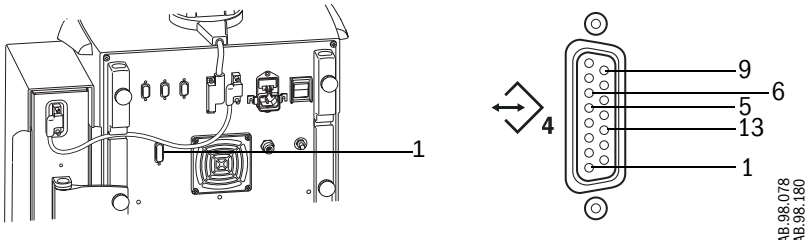

1. Port 4

The 15-pin female D connector - Data Communications Equipment (DCE) configuration:

- pin 1 - monitor On/Standby
- pin 5 - ground
- pin 6 - display unit receive
- pin 9 - monitor On/Standby return
- pin 13 - display unit transmit

Nurse call

Port 4 may also be used to output alarm signals to a nurse call system. The ventilator will signal an alarm with a normally open or normally closed signal.

Note Only systems with the neonatal option or systems with serial number CBCK00357 or higher have the nurse call functionality.

The nurse call will be triggered by all medium and high priority alarms. When alarms are suspended, the nurse call will not be signalled. If an alarm is silenced, the nurse call signal will turn off.

WARNING The ventilator should be used as the primary source of alarm information. The nurse call system enables the availability of ventilator alarm information at a secondary location. The appropriate audio alarm levels must be maintained on the ventilator regardless of a connection to a nurse call system.

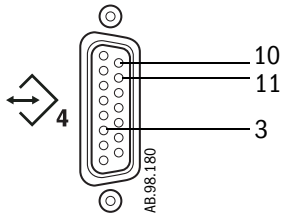

The 15-pin female D connector configuration:

- pin 3 - relay common
- pin 10 - normally open
- pin 11 - normally closed

Load current:

- Minimum: 100 uA at 100 mVdc
- Maximum: 1 A at 30 Vdc
- Relay isolated

Electronic micropump nebulizer

The Aeroneb Professional Nebulizer System (Aeroneb Pro) by Aerogen, Inc. is integrated into the EC.

The Aeroneb Pro is designed to operate in-line with standard ventilator circuits and mechanical ventilators in acute and subacute care environments. It operates without changing the patient ventilator parameters and can be refilled without interrupting ventilation.

The nebulizer may be used with a neonatal, pediatric, or adult breathing circuit. The T-adapter for the nebulizer is specific to the breathing circuit type.

CAUTION Datex-Ohmeda strongly recommends the use of an expiratory filter when a nebulizer is used to help protect the expiratory flow sensor.

WARNING Use of a heat-moisture exchanger in the breathing circuit can substantially increase flow resistance when a nebulizer is active.

⚠ Do not use a heat-moisture exchanger or heat-moisture exchanger filter between the nebulizer and the patient airway.

⚠ The EC is matched to the Aeroneb Pro for optimum performance. Use of external pneumatic nebulizers in certain modes will result in alteration of volume, percent oxygen delivery, triggering, and may produce alarm conditions.

Assembling the nebulizer

1. Connect the nebulizer to the T-adapter by pushing the nebulizer firmly onto the adapter.

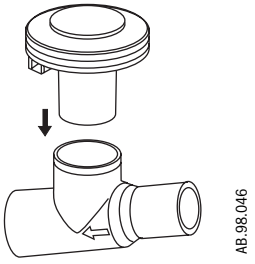

2. Connect the nebulizer and T-adapter into the inspiratory limb of the breathing circuit before the patient wye.

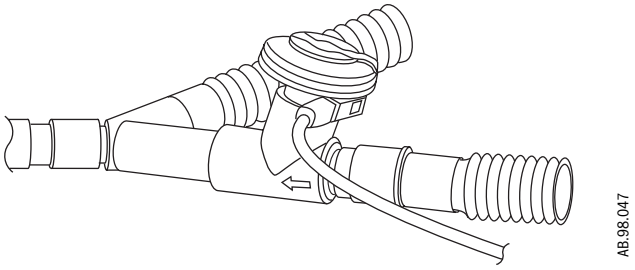

WARNING Always maintain the nebulizer in a vertical orientation while in the patient circuit. This orientation helps prevent patient secretions and condensate from contaminating the aerosol generator of the nebulizer and ensures proper nebulization.

3. Attach the connector to the nebulizer connection as shown, matching the red dots.

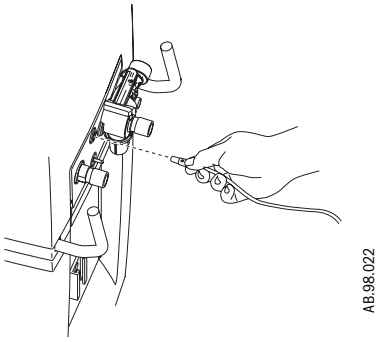

4. Complete a system Checkout prior to use on a patient.
5. Follow the nebulizer procedure in *"Operation and Tutorial."*

Filling the nebulizer

CAUTION To help avoid damage to the nebulizer, do not use a syringe with a needle.

⚠ The maximum capacity of the nebulizer is 10 ml. Do not fill the nebulizer beyond the maximum fill indication point. The underside of the filler cap represents maximum fill indication point.

1. Open the filler cap tab on the nebulizer.
2. Use a prefilled nebule or syringe to inject the medication into the filler port.
3. Close the filler cap tab.

Disassembling the nebulizer

The nebulizer and T-adapter may remain in the patient circuit when not in use. The nebulizer may be removed from the T-adapter and replaced with a plug to avoid leaks.

1. To remove the connector, grasp it close to the ventilator and pull straight out.
2. Remove the nebulizer and T-adapter from the inspiratory limb of the patient breathing circuit. Reconnect the circuit.
3. Clean and sterilize the nebulizer and T-adapter as described in *"Cleaning and Maintenance."*

Auxiliary pressure

Auxiliary pressure is a supplementary pressure measurement that can be displayed with a waveform and numerics.

1. Attach tubing to the auxiliary pressure port as shown, sliding tubing over barbed end of port. The internal diameter of the tubing can range from 1/8 in (3 mm) to 1/4 in (6 mm).

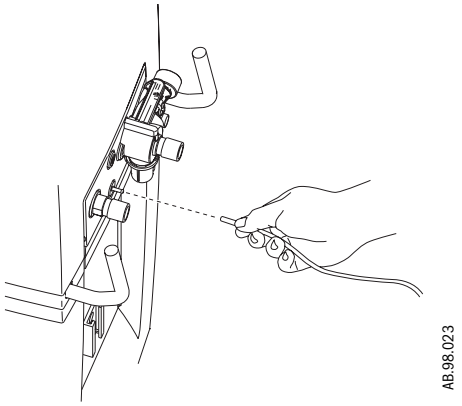

2. To display the Paux waveform follow the instructions in "*Screen configuration*" in section 2.
3. To disconnect, grasp the tubing and pull straight off of the barb.

Purging of tubing

Monitoring lines may become clogged and effect performance. To purge the line complete the following steps.

WARNING Purge Flow will deliver 35 ± 15 ml/min of air. Do not initiate Purge Flow when the Paux port is connected to a closed system such as an endotracheal cuff.

1. Disconnect the patient end of the tubing.
2. Push **System Setup**.
3. Select ***Parameters Setup - Paux Setup - Purge Flow - On*** to begin flow. The auxiliary pressure port is protected to 100 cmH_2O to prevent overpressuring the tubing.
4. Select ***Off*** to end flow.
5. Reconnect the patient end of the tubing.

Zeroing

Auxiliary pressure measurements will be more accurate if the pressure is zeroed before use.

1. Push **System Setup**.
2. Select ***Parameters Setup - Paux Setup - Paux Zero***.
3. When complete, ***Done*** will appear next to ***Paux Zero***.

When using auxiliary pressure with the purge flow continuously on, the pressure should be zeroed with Purge Flow On. This will ensure that any pressure offset caused by the monitoring line resistance will be accounted for.

Humidifier mount (optional)

The EC is designed to work with active humidification.
Datex-Ohmeda does not recommend the use of a specific brand or model of humidifier.

WARNING When adding attachments or other components to the EC, the resistance to flow across the breathing circuit may increase.

1. Unlock and remove the ventilator unit from the cart.
2. Slide the humidifier onto the humidifier mounting bracket.

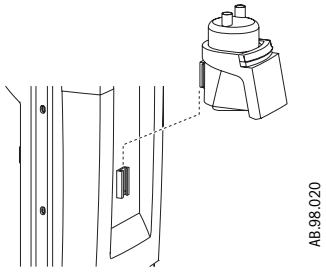

3. Guide the power cord through the rear channel on the cart.

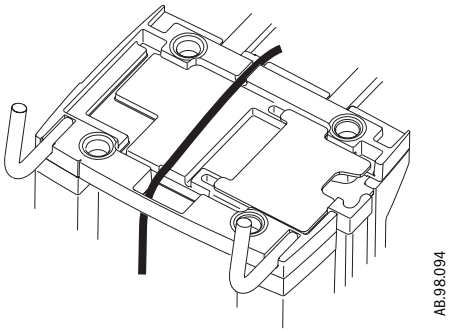

4. If a cord holder is attached to the top of the cart, place the power cord on top of the square and bend the holder over to keep the cord in place.

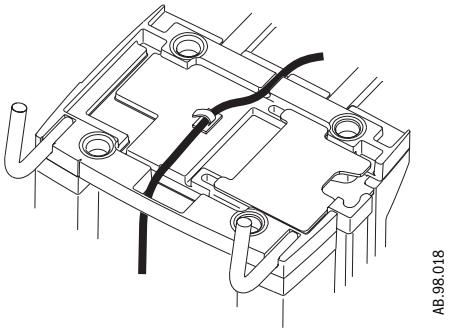

5. Replace the ventilator and lock onto the cart.
6. If the expiratory water trap will be used, slide the water trap onto the bracket. Ensure the latch snaps into place.

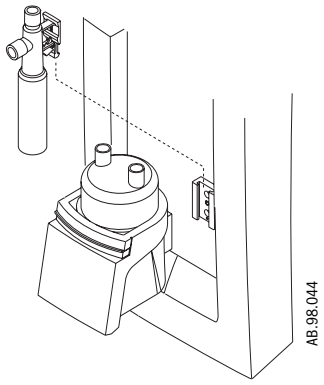

7. Plug the humidifier into the electrical outlet or other AC mains power source.
8. Set the humidifier as directed in the manufacturer's operation manual.

Note To remove the expiratory water trap, squeeze the latch at the base of the bracket and slide the trap up.

Refer to the humidifier manufacturer's operation manual for information on cleaning and maintenance.

WARNING When a filter is used in the exhalation limb in conjunction with a water bath humidifier, a water trap should be placed between the filter and the patient.

- Never position any filter in the inspiratory limb downstream of a water bath humidifier.
- Do not use the filter between the patient and any source of nebulized drugs.
- When nebulized drugs are administered, breathing resistance should be monitored and the filter should be replaced following standard hospital procedure.

Support arm (optional)

The support arm may be placed on either side of the ventilator to support the patient breathing circuit. To attach to the ventilator, place the post into the arm holder and tighten the thumbscrew.

WARNING Do not exceed 2 kg load at patient end of support arm.

Important The support arm is not a sterile component and cannot be autoclaved or immersed in cleaning solution.

To attach the arm:

1. Loosen thumbscrew.
2. Place post in the arm holder.
3. Tighten thumbscrew to hold arm in position.

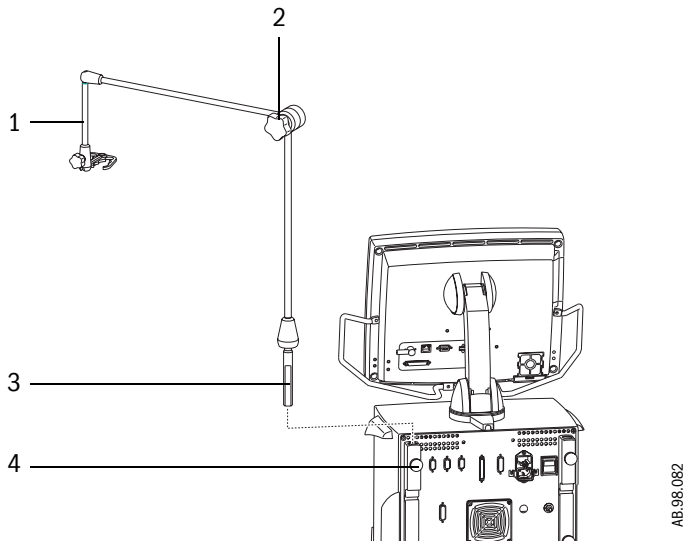

1. Patient side of support arm
2. Central tension handle
3. Post
4. Thumbscrew

Figure 3-3 • Support arm

To position the arm:

1. Loosen by turning the central tension handle counter-clockwise while holding the patient side of the arm in the other hand.

Note There is a stop to prevent the central tension handle from being completely loosened.

2. Move the arm to the desired position.
3. Tighten by turning the central tension handle clockwise.

Isolated electrical outlets (optional)

The configuration of the electrical outlets varies by country.

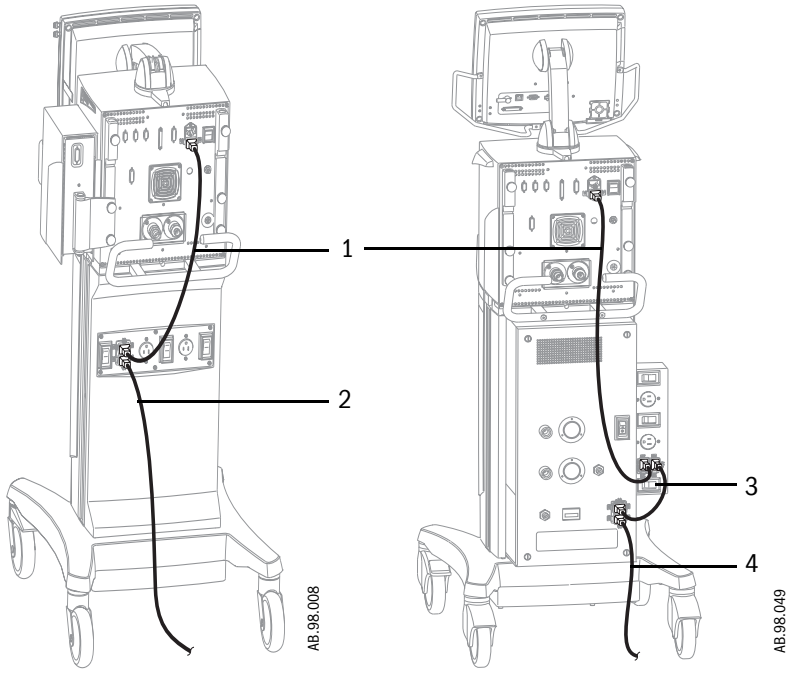

1. Ventilator to outlet power cord
2. Outlet to AC mains power cord
3. Outlet to compressor power cord
4. Compressor to AC mains power cord

Figure 3-4 • Power cord routing with electrical outlets

WARNING Do not overload the electrical outlets.

Electrical outlet panel ratings

Voltage	Current
100 to 120 V	6 A
220 to 240 V	4 A

EVair 03 compressor (optional)

The EVair 03 compressor is intended for use as an optional accessory to Datex-Ohmeda critical care ventilators as a breathable compressed air supply. The EVair compressor can act as the primary air supply or as the backup air supply if pipeline air is connected to the compressor. If the pipeline air pressure drops below 250 kPa (36 psi), the EVair automatically turns on to provide an air supply to the ventilator.

The compressor has no alarm functions. All alarm functions and reactions to failure of the compressed gas supply are provided by the ventilator.

The compressor should be installed in the base of the ventilator cart. The compressor is powered from AC mains.

If the compressor is the primary air supply to the system, ensure that a compressed oxygen supply is also connected.

WARNING A compressor should be used if a reliable air pipeline source is not available.

⚠ Do not block air inlet or exhaust vents. Do not place near a radiator or heating unit. Compressor may overheat and shut down.

⚠ The cooling air exhaust grill may become hot to the touch during use.

⚠ Do not use compressor in poorly ventilated area. Compressor will produce heat when in use.

⚠ Do not place the compressor near a source of airborne contamination such as cleaning products or other chemicals, vapors, odors, or exhaust gases. The compressor uses air from its surroundings for delivery to the ventilator and patient.

⚠ If the compressor is the primary air supply to this system, ensure that a compressed oxygen supply is also connected.

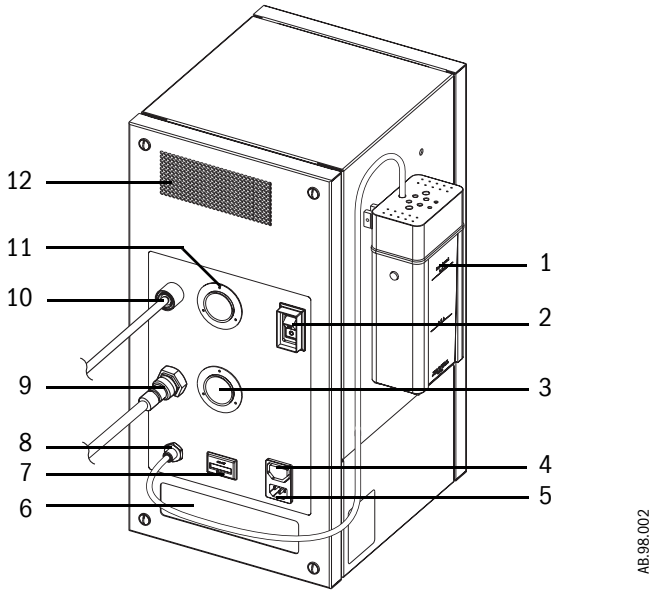

1. Drain bottle
2. Compressor power switch
3. Pipeline pressure gauge
4. Accessory outlet (see warning below)
5. AC mains inlet
6. Air inlet filter
7. Hourmeter
8. Drain outlet
9. Pipeline air inlet
10. Compressor air outlet (to ventilator)
11. Pump pressure gauge
12. Cooling air exhaust

Figure 3-5 • Controls on compressor

WARNING Use Datex-Ohmeda accessories only.

- Mains voltage is applied to the accessory outlet when the compressor is connected to mains. To isolate from mains, disconnect the compressor from the wall.
- Accessory outlet is not fused. Ensure accessory is appropriately protected (maximum current draw for 120 V, 6 A; maximum current draw for 230 V, 4 A).

Before each use

Check to ensure the compressor is working properly. Complete these steps:

1. Check the air inlet filter. Clean or replace as necessary. Refer to the *"Cleaning and Maintenance"* section for instructions.

WARNING Failure to maintain the air inlet filter may cause the compressor to overheat and shut down.

2. Check the drain bottle. Empty as necessary.
3. Connect the compressor power cord to a grounded AC mains power outlet.

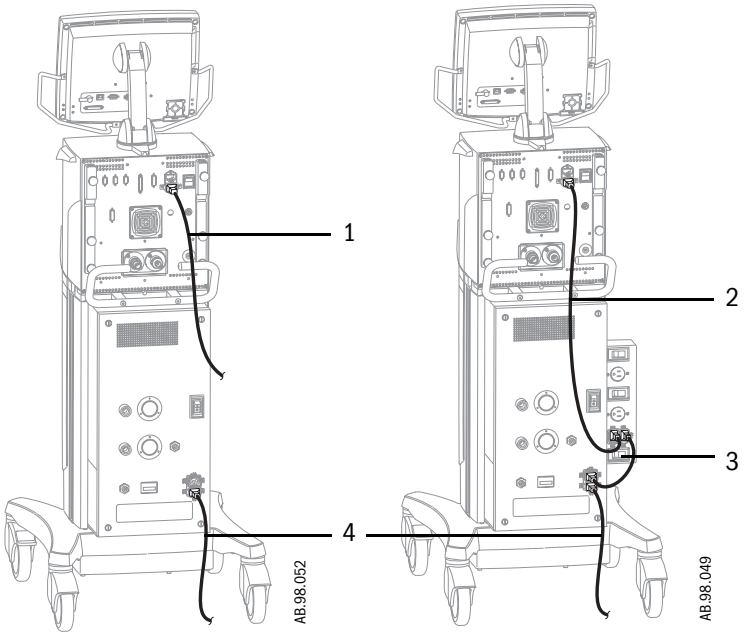

1. Ventilator to AC mains power cord
2. Ventilator to outlet power cord
3. Outlet to compressor power cord
4. Compressor to AC mains power cord

Figure 3-6 • Power cord routing with a compressor

4. If a pipeline hose is connected to the compressor pipeline air inlet, temporarily disconnect it from the pipeline supply outlet.
5. Check to make sure an air hose is connected from the compressor air outlet to the ventilator air inlet.
6. Discharge any air pressure in the compressor reservoir by operating the ventilator on a test lung or temporarily disconnecting the compressed air outlet hose at the ventilator until the air pressure is depleted.

7. Turn on the compressor power switch. The green indicator light should turn on.
8. Make sure the compressor begins to run and the pump pressure gauge stabilizes at 550 ± 50 kPa (80 ± 7.3 psi) within 30 seconds after turning the power on.
9. If the compressor is to be used as a reserve for the air pipeline supply, connect a hose from the compressor pipeline air inlet to the pipeline medical air supply. The pipeline pressure gauge should indicate 280 to 650 kPa (41 to 94 psi). The pump should be in standby while the power switch light remains lit.

4 Operation and Tutorial

WARNING Ventilator alarms indicate potential hazard conditions. All alarms that occur should be investigated to help ensure adequate patient safety.

In this section

Preparing the ventilator for a patient 4-2
Select Patient 4-2
Starting ventilation 4-15
Entering Standby 4-16
Monitoring 4-16
Changing settings while ventilating 4-17
Using snapshots 4-18
Viewing trends 4-19
Viewing spirometry loops 4-20
Performing procedures 4-22
EVair 03 compressor operation 4-27

Preparing the ventilator for a patient

Turning on the system

1. Plug the power cord into the wall outlet.
   - The green mains indicator on the display lights when AC power is connected.
   - The ventilator automatically switches to battery power if AC power fails.
2. Turn the System switch on.
   - A start-up screen appears while the ventilator is booting up and completing self tests.
   - Once the self tests pass, the system is in Standby and the display shows the ***Select Patient*** menu. This should occur within 60 seconds.
   - If the self tests fail, the display shows an alarm. Refer to *"Alarms and Troubleshooting"* for assistance.
   - Ensure that two distinctly different audio alarm tones sound.

WARNING The EC is equipped with a backup audio buzzer. If both the primary and backup audio tones do not sound when the ventilator is powered up, take the ventilator out of service and contact a Datex-Ohmeda trained service representative.

- Ensure alarm LEDs blink.
- Ensure all water traps and filters are clean prior to using the ventilator.

Select Patient

Patient Type may be set to either ***Adult***, ***Pediatric,*** or ***Neonatal***. Selecting a value will change the ventilation settings to the facility defaults for that patient type. The Patient Type selection is used internally by the ventilator to match the pneumatic response to a particular patient type.

Only settings for the selected patient type will be accessible. The system will need to be turned off and turned on again to select a new patient type and settings.

Note If the Neonatal option is not installed on the system, the menu item will be disabled.

Pre-use checkout

The EC is equipped with an automated checkout. Complete the checkout before using the ventilator on a new patient. The ventilator should be fully cleaned and prepared for a patient prior to performing the checkout.

WARNING To help ensure the proper function of the system, it is highly recommended to complete the pre-use checkout between patients.

⚠ If a checkout is not completed, the system uses the compliance and resistance data from the last system test for all internal compensations. If the current breathing circuit differs significantly from the previous circuit, differences in ventilation parameters due to changes in the compensation process are possible. This may result in risk to the patient.

⚠ Changing patient breathing circuits to a different compressible volume after the checkout will affect the volume delivery and exhaled volume measurements.

⚠ The patient must NOT be connected to the ventilator when completing the Checkout.

When in Standby, the ***Patient Setup*** menu will be displayed on the normal screen.

1. Select ***Checkout***.
2. Attach the patient circuit.
3. Occlude the patient wye.
4. Select ***Start Check***.
   - The results appear next to each check as they are completed. When the entire checkout is finished ‘Checkout complete’ will appear and the highlight will move to ***Delete Trends***.
5. Select ***Yes*** to erase trends or ***No*** to retain the saved trends.
6. If one or more checks failed, select ***Check Help*** for troubleshooting tips.

Note The circuit leak is measured at 25 cmH_2O, and resistance is resistance of the inspiratory side only.

7. If all tests passed, select ***Previous Menu***.

Checkout includes the following checks:

- Paw Transducer Check
- Barometric Pressure Check
- Relief Valve Check
- Exhalation Valve Check
- Expiratory Flow Sensor Check
- Air Flow Sensor Check
- O2 Flow Sensor Check
- O2 Concentration Sensor Check
- Circuit Leak, Compliance, and Resistance

Note If the circuit leak is greater than 0.5 l/min or Resistance or Compliance cannot be calculated the Circuit Check will fail.

If the circuit leak is greater than 0.5 l/min or if the exhalation flow sensor is changed after Checkout, the expiratory tidal volume measurement may have decreased accuracy.

Testing alarms

The alarms may be tested after the Checkout has been completed. Connect a patient circuit and a test lung to the ventilator to complete any of the following tests.

Note Before completing any of the tests, select **Vent Setup - *Standby - Off***. When testing is complete, select **Vent Setup - *Standby - On***.

Note Resolved alarms appear as white text on a black background and will remain on the screen until **Silence Alarms** is pushed.

Setting up for test

1. Select **Vent Setup - *VCV - Confirm***.
2. Start ventilation by selecting **Vent Setup - *Standby - Off***.
3. Ensure that no alarms are present. If necessary, modify current alarm limits.

Pmax alarm test

1. If not already in VCV mode, select **Vent Setup - *VCV - Confirm***.
2. Change ***Pmax*** to violate the alarm condition.
3. Use the following indicators to verify that the alarm is working correctly:
   - The next complete breath does not rise more than 2 cmH_2O above Pmax.
   - The ‘Ppeak high’ alarm appears and sounds.
   - The Ppeak measurement appears in a flashing red box.
   - The red LED flashes.
4. Increase Pmax to remove alarm condition.
   - The Ppeak alarm message changes to white text on a black background indicating that the alarm has been resolved.
   - The alarm tone no longer sounds and the LED turns solid red until **Silence Alarms** is pushed to clear the alarm.
5. Change ***Plimit*** to below Ppeak.

6. Verify the following:
   - Breaths are limited at Plimit.
   - The ‘Plimit reached’ alarm appears and sounds.
7. Change Plimit to above Ppeak to remove alarm condition.

Minute volume alarms test

1. If not already in VCV mode, select **Vent Setup -** ***VCV - Confirm***.
2. Select **Alarms Setup -** ***Adjust Limits***.
3. Change MVexp lower limit to violate the alarm condition and keep the menu open.
4. Use the following indicators to verify that the alarm is working correctly:
   - The ‘MVexp low’ alarm appears and sounds.
   - The MVexp measurement appears in a flashing red box.
   - The red LED flashes.
5. Change the MVexp lower limit to remove alarm condition.
   - The ‘MVexp low’ alarm message changes to white text on a black background indicating that the alarm has been resolved.
   - The alarm tone no longer sounds and the LED turns solid red until **Silence Alarms** is pushed to clear the alarm.

Apnea alarm test

1. If not already in VCV mode, select **Vent Setup -** ***VCV - Confirm***. The default settings may be used for this testing.
2. Disconnect the expiratory side of the patient circuit from the ventilator.
3. Use the following indicators to verify that the alarm is working correctly:
   - The ‘Apnea’ alarm appears and sounds.
   - The Respiratory Rate measurement displays ‘APN’ in a flashing red box.
   - The red LED flashes.
   - ‘Apnea’ is displayed in red text in the Paw waveform.
4. Connect the expiratory side of the patient circuit to the ventilator.
   - Verify the ‘Apnea’ alarm message changes to white text on a black background indicating that the alarm has been resolved.
   - The alarm tone no longer sounds and the LED turns solid red until **Silence Alarms** is pushed to clear the alarm.

Low O2 alarm test

1. If not already in VCV mode, select **Vent Setup -** ***VCV - Confirm***.
2. Using the quick key, change ***FiO2*** to 50%.
3. Select **Alarms Setup -** ***Adjust Settings***.
4. Change the FiO_2 upper alarm limit to 70% and the FiO_2 lower alarm limit to 60% and keep the menu open.
5. Use the following indicators to verify that the alarm is working correctly:
   - The 'FiO2 low' alarm appears and sounds.
   - The FiO_2 measurement appears in a flashing red box.
   - The red LED flashes.
6. Change the FiO2 upper and lower alarm limits to 56% and 44%.
   - Verify the 'FiO2 low' alarm message changes to white text on a black background indicating that the alarm has been resolved.
   - The alarm tone no longer sounds and the LED turns solid red until **Silence Alarms** is pushed to clear the alarm.

Important Make sure the alarm limits are set to the desired values before using the ventilator on a patient.

Patient weight

Changing the value of ***Patient Weight*** while in Standby will change the TV and Rate settings to values that are suggested starting points for the weight entered. Changing the patient weight while ventilating will have no effect on the settings or alarms.

Calculations for TV and Rate values when patient weight is entered during Standby	
Respiratory Rate	g = weight in grams RR = Respiratory Rate If g is less than or equal to 5,000, then RR = 30. If g is between 5,000 and 10,000, then RR = 30 - (10 x [{g - 5,000}/5,000]). If g is between 10,000 and 30, 000, then RR = 20 - (10 x [{g - 10,000}/20,000]). If g is greater than 30,000, then RR = 10.
Tidal Volume	kg = weight in kilograms (If kg is greater than 100, then kg = 100.) RR = Respiratory Rate dead space (ds) = kg/0.45 If kg is less than or equal to 45, then TV= ds + (ds x [1.35 + {100- ds} x 0.0135]/0.05/RR). If kg is between 45 and 100 or equal to 100, then TV = ds + (ds x [1.35/0.05/RR]).

Patient ID

Use the ***Patient ID*** menu item to enter an alphanumeric Patient ID code up to 10 characters.

1. Select the desired characters and push the ComWheel to confirm.
2. If less than 10 characters are entered, select ***SAVE*** and push the ComWheel to confirm the patient ID entered.
   - It is necessary to select ***SAVE*** if the ***CLR*** or ***DEL*** menu items were used while entering Patient ID.
   - If ten characters are entered, the system automatically saves and returns the highlight to ***Patient ID***.

Vent Setup

Ventilator setup selections are made in the ***Vent Setup*** menu. The Vent Setup menu can be accessed through the **Vent Setup** key or through the ***Patient Setup*** menu.

Ventilation mode

Modes may be changed in Standby or while the ventilator is operating.

1. Select ***Vent Setup***.
2. Select desired mode.
   - The arrow identifies the current mode.
3. Select ***Confirm***.

Ventilation soft limit indicators

When adjusting ventilation settings, visual indicators (or soft limits) show the parameters are approaching their setting limits.

Quick key and menu item boxes will show in yellow or red as a warning of high values when ventilation settings are selected. The user will be allowed to set the limit. It is only a visual cue that the parameter is approaching the setting limit. The parameters with soft limits are Pmax, PEEP, Pinsp, Psupp, Tinsp, RR, I:E, Thigh, Tlow, Phigh, Plow.

Ventilation settings

All settings should be set prior to connecting a patient to the ventilator. To change the settings for the current mode:

1. Select ***Vent Setup***.
2. Select ***Adjust Settings***.
3. Scroll to the desired setting.

Note Some modes have two menus with settings. Selecting ***-More-*** will display the second menu.

4. Select setting, change the value, and push the ComWheel to confirm the setting.
5. Select ***Exit*** when complete.

The following settings are used in the system. Not all settings are available for all modes of ventilation. The range and resolution of each of the settings are listed in the *"Specifications"* section.

Setting	Definition
Bias Flow	The minimum flow that is delivered through the patient circuit during the expiratory phase of the breath cycle. It is used in the flow trigger mechanism and provides a reservoir of fresh gas for the patient. The bias flow may be automatically increased above this setting depending on the FiO2 setting.
End Flow	The percentage of peak flow at which the pressure supported breath terminates the inspiratory phase and enters the expiratory phase.
FiO2	The percentage of oxygen that is delivered to the patient from the ventilator.
Flow	Set only in volume modes, the flow setting allows the user to set the specific flow that the ventilator will use to deliver the set tidal volume to the patient during the inspiratory phase of the breath.
I:E	The ratio between the inspiratory and expiratory time.
Insp Pause	The percentage of inspiratory time at the end of the inspiratory phase in a volume mode, where the breath is held and there is no flow.
PEEP	The pressure held on the patient's lungs by the ventilator at the end of expiration.
Phigh	Set only in BiLevel mode, the Phigh is the high pressure level at which the patient can spontaneously breathe and is an absolute pressure level.
Pinsp	The pressure above PEEP delivered to a patient in each pressure-controlled breath.
Plimit	The pressure at which the breath is limited and held for the set inspiratory time in a volume mode.
Plow	Set only in BiLevel mode, the Plow corresponds closely to the PEEP level in all other modes. It is the low pressure level at which the patient can breathe spontaneously.
Pmax	The maximum airway pressure allowed in the patient breathing circuit. Once reached, the inspiratory phase will be terminated and the ventilator will cycle immediately to the expiratory phase.
Psupp	The pressure above PEEP that is delivered during a pressure-supported breath.
PSV Rise Time	The time in milliseconds needed for the profiled pressure to reach 90% of the set pressure support level.
Rate	The number of breaths delivered to the patient in one minute.
Rise Time	The time in seconds needed for the profiled pressure to reach 90% of the set Pinsp or volume-controlled flow.
Thigh	The amount of time in seconds that the ventilator will hold the high pressure level in BiLevel mode.
Tinsp	The time in seconds that the ventilator uses to deliver the inspiratory phase of the breath cycle.
Tlow	The amount of time in seconds that the ventilator will hold the low pressure level in BiLevel mode.
Tpause	The amount of time in seconds at the end of the inspiratory phase in a volume mode where the breath is held and there is no flow.
Trig Window	The percent of the exhalation time when the ventilator will synchronize the delivery of the mandatory breath. It is measured from the end of the expiratory phase back towards the end of the previous inspiratory phase.
Trigger	A signal that causes the ventilator to start the inspiratory phase of a breath. The trigger can use either a negative pressure deflection or a flow signal.
TV	The set volume of gas delivered from the ventilator on each volume controlled breath.

Ventilation preferences

Ventilation preferences are set through the ***Vent Preferences*** menu. To adjust the ventilation preferences during ventilation, push **System Setup** then select ***Patient Setup***.

Selecting a Backup mode

Ventilation modes to which backup ventilation apply are established by facility defaults. See *Installation Mode*, section 10.

WARNING Ensure that all users at the facility have been trained and notified of the facility default settings relating to Backup mode.

Backup ventilation will be initiated if the Apnea alarm is triggered or if the patient's minute ventilation decreases to below 50% of the set low MVexp alarm. Backup settings may be changed for each patient.

1. Select ***Vent Preferences - Backup Mode***.
2. Select the ventilation mode to be used if the system goes into backup ventilation.
3. Use the ComWheel to navigate through the adjustment window and to change a value. Grayed-out values are carried over from the current ventilation mode.
4. Confirm the settings.

Note Backup mode can be set to any mode except CPAP/PSV.

Changing Backup mode settings

To adjust the settings of a selected Backup mode

1. Select ***Vent Preferences - Backup Mode***.
2. Select ***Adjust Settings***.
3. Scroll to the desired setting.
4. Select setting, change the value, and push the ComWheel to confirm the setting.
5. Select ***Exit*** when complete.

Airway Resistance Compensation (ARC)

Airway Resistance Compensation (ARC) adjusts the target delivery pressure to compensate for the resistance caused by the endotracheal tube or tracheostomy tube used. The compensation is applied to the inspiratory phase of all pressure-controlled, CPAP, and pressure-supported breaths.

1. Select ***Vent Preferences - ARC***.
2. Select desired settings.
   - Type and size of tube.
   - Compensation. The compensation setting determines for what percentage of the total tube resistance is compensated.
3. Select ***Previous Menu***.

Note ARC settings of 75% and higher may result in brief minor overshoots of target lung pressure depending on patient conditions, including low airway resistance and low lung compliance. Ensure proper Pmax setting when using ARC. ARC control is limited to Pmax - 4 cmH_2O.

Assist control

Assist control is available in VCV, PCV, and PCV-VG modes. Activate assist control through the ***Vent Preferences*** menu.

- Set to ***On*** to deliver a controlled breath during the expiratory phase when a patient trigger is detected.
- Set to ***Off*** to support spontaneous patient breathing at the PEEP pressure level during the expiratory phase.

When Assist Control is set Off, the EC will allow spontaneous inspirations from the PEEP level to be completed, and delay the delivery of the next controlled breath in order to minimize breath stacking. Under certain conditions such as high spontaneous breathing rates or high leakage, the delivered rate of controlled breaths may fall below the set rate. To ensure that the rate of delivery of controlled breaths meets or exceeds the set rate, Assist Control should be set On.

Leak compensation

Leak compensation automatically adjusts ventilation delivery and monitoring for breathing circuit and patient airway leaks to maintain desired tidal volume delivery in the presence of leaks. Activate leak compensation through the ***Vent Preferences*** menu.

The system calculates the instantaneous leak rate by using the average leak over the previous minute and the instantaneous and mean airway pressures:

- MVleak = MVinsp - MVexp
- Leak rate = MVleak x (instantaneous Paw / mean Paw from the previous minute)
- Leak compensated patient flow = measured Flow - Leak rate

Leak compensation provides the following benefits to the clinician when leaks are present:

- Leak compensated volume delivery: The vent engine's delivered tidal volume is compensated upwards to ensure the patient receives the set tidal volume. Leak compensated volume delivery is available in VCV, PCV-VG, and SIMV-VC.
- Leak compensated waveforms and measured values: Adjusts the flow and volume waveforms and measured values for the effects of leaks in the breathing circuit (adult and pediatric only) and patient airway. The Leak Compensated Patient Flow is used for the flow and volume waveform displays, and measured values (TVinsp, TVexp, MVinsp, MVexp). Leak compensated waveforms and measured values are only displayed when their Data Source is "Vent".
- Leak compensated end flow: Uses Compensated Patient Flow to determine when end flow is reached in the presence of inspiratory phase leaks. Leak compensated end flow is available in all modes with PSV breaths.
- Measured value Leak %: Displayed next to the flow waveform to indicate the amount of leak in the previous minute and is calculated as: Leak % = MVleak* 100 / (actual MVinsp). Leak % is displayed whenever ***Vent*** is selected as the data source.

Example:

Given the following settings and measured values and assuming there are no water vapor and temperature effects:

- TV = 300 ml
- RR = 10
- I:E = 1:2
- measured leak volume during previous inspiratory phase = 55 ml
- measured leak volume during previous expiratory phase = 25 ml

During the next breath, the vent engine delivers 355 ml during inspiration. The patient will receive 300 ml. The expiratory flow sensor will measure 275 ml. Measured TVinsp and TVexp will report 300 ml. Assuming this same breath profile repeats itself, MVinsp and MVexp will report 3.0 l/min. The Leak % will report (3.55-2.75) / 3.55 => 23%.

This example demonstrates a leak compensated volume delivery of 55/300 => 18%. The system limits volume control leak compensation to 25% of set tidal volume for adult patients and 100% or 100 ml, whichever is less for pediatric patients.

Note Leak rate is based on the average leak from the previous minute, it may take up to one minute for the system to fully respond to changes in patient leak rates.

Note While the 'Circuit leak?' alarm is active, volume control leak compensation will not exceed the compensation level that existed at the time the alarm became active.

Trigger compensation

Trigger compensation adjusts the flow trigger for leaks in the breathing circuit and patient airway, reducing the need to manually adjust the Trigger setting to prevent autotriggering. Trigger compensation is available in all modes and may be activated through the ***Vent Preferences*** menu.

Example:

- MV_{leak} = MVinsp - MVexp
- Leak rate = MV_{leak} x (instantaneous Paw / mean Paw from the previous minute)
- Flow to the patient = measured Flow - Leak rate
- When the flow to the patient exceeds the set Trigger, a breath will be delivered.

TV based on

The flow and volume values are adjusted based on the condition that is selected for TV Based on in the ***Vent Preferences*** menu.

- Use ambient temperature pressure dry (ATPD) when a humidifier is not added to the patient circuit.
- Use body temperature pressure saturated (BTPS) when an active humidifier is added to the inspiratory limb of the circuit.

Example: If BTPS is selected and the tidal volume is set for 300 ml, the ventilator will deliver 266 ml (assuming ambient 20°C and 745 mmHg.) The humidifier will warm the tidal volume delivered and add water vapor. This results in a delivery of 300 ml to the patient because the temperature and humidity effects the flow and volume delivered.

Alarm limits

These alarm limits can be changed:

- Low and High Ppeak
- Low and High MVexp
- Low and High TVexp
- Low and High RR
- Low and High $EtCO_2$
- Low and High EtO_2
- Low and High FiO_2
- Low and High PEEPe
- High PEEPi
- High Paux

To change an alarm limit:

1. Push **Alarms Setup**.
2. Select ***Adjust Limits***.
3. Scroll to the desired alarm.
4. Select alarm limit and change value.
5. Select ***Exit*** when complete.

Note The low Ppeak alarm is not active for pressure-supported breaths in CPAP/PSV mode.

FiO2 alarm limits

The Low and High FiO_2 alarm limits are based on current settings. The FiO_2 alarm limits are set by default to ±6 from the current FiO_2 setting. The differential alarm limits may be changed manually. If an alarm limit is changed, the ventilator will maintain the difference between the alarm limit setting and the FiO_2 setting, even if the FiO_2 setting is changed.

For example, if the current setting for FiO_2 is 65%, the default of the High FiO_2 alarm limit would be 71%, a difference of 6%. A change to the FiO_2 setting to 75% will result in the alarm limit being raised to 81%, maintaining the 6% difference. If the alarm limit is manually changed to 85%, creating a 10% difference from the setting, subsequent FiO_2 setting changes will maintain the new 10% alarm limit difference.

Note The current FiO_2 displayed on the ***Alarms Setup*** menu will always be linked to the ventilator, even if the measurement is from the airway module.

Note The High FiO2 alarm is disabled when set FiO2 = 100%.

Selecting a data source

Several monitoring parameters may be obtained from either the ventilator or the airway module. These include Ppeak, Pmean, PEEPe, PEEPi, TVinsp, TVexp, RR, MVexp, Compl, and Raw. Information that is retrieved from the airway module is identified with the module data indicator. See the *"Airway modules"* section for more information.

1. Push **System Setup**.
2. Select ***Parameters Setup - Data Source***.
3. Select ***Vent*** or ***Mod*** as the primary source for information.
   - If Vent is selected, the internal sensors of the ventilator will be the first source for information.
   - If Mod is selected, the airway module will be the first source for information. If information is not available through the airway module, information will come from the internal ventilator sensors.

Note If Mod is selected and the airway module is warming up, information from the Vent will be used until the airway module information is available. Warm up can take up to 2 minutes.

Note The internal sensors of the ventilator are used as the data source to determine Vol waveform measured values.

Starting ventilation

WARNING Do not use antistatic or electrically conductive breathing tubes or masks.

⚠ The ventilator shall not be covered in such a way that fans and exhaust ports are compromised or positioned in such a way that the operation or performance is adversely affected.

⚠ Ensure that an alternate means of ventilation is available any time the ventilator is in use.

Method 1:

1. Push the standby key.
2. Select ***Start Ventilation***.
3. Connect the circuit to the patient.

Method 2:

1. Push **Vent Setup**.
2. Select ***Standby*** - ***Off***.
3. Connect the circuit to the patient.

Entering Standby

Monitoring and ventilation will cease when the ventilator is placed into Standby. Follow one of the methods for "*Starting ventilation"* to exit Standby.

WARNING The patient will not be ventilated when in Standby.

Method 1:

1. Push the standby key.
2. Disconnect the patient from the circuit.
3. Select ***Standby***.

Method 2:

1. Push **Vent Setup**.
2. Disconnect the patient from the circuit.
3. Select ***Standby*** - ***On***.

Turning the system off

The system may only be turned off when in Standby. Follow the procedure for *"Entering Standby,"* and turn the system switch off.

Monitoring

The EC with an airway module installed may be used as a CO_2, O_2, spirometry, and metabolic monitoring device. Ventilation will cease when the ventilator is placed into Monitoring Only.

WARNING The patient will not be ventilated when in Monitoring Only.

Method 1:

1. Push the standby key.
2. Select ***Monitoring Only***.

Method 2:

1. Push **System Setup**.
2. Select ***Patient Setup*** - ***Monitoring Only***.

Changing settings while ventilating

Ventilation settings

Method 1:

1. Push a quick key.
2. Change the value.
3. Confirm the setting.

Method 2:

1. Push **Vent Setup**.
2. Select ***Adjust Settings***.
3. Scroll to the desired setting.

Note Some modes have two menus with settings. Selecting ***-More-*** will display the second menu.

4. Select setting, change the value and push the ComWheel to confirm the setting.
5. Select ***Exit*** when complete.

Ventilation preferences

1. Push **System Setup**.
2. Select ***Patient Setup - Vent Preferences***.
3. Adjust the desired selections.
4. Push **Normal Screen**.

Alarm limits

1. Push **Alarms Setup**.
2. Select ***Adjust Limits***.
3. Scroll to the desired alarm.
4. Select alarm limit and change value.
5. Select ***Exit*** when complete.

Note Selecting ***Auto Limits*** will change the following alarm limit settings based on current measured values.

- Low and High MVexp
- Low and High TVexp
- Low and High RR
- Low and High $EtCO_2$
- Low and High PEEPe

This table explains how the auto limits are calculated from the measured values.

Alarm Setting	Upper Limit	Lower Limit
MVexp	(2.5)(current MVexp)	(0.5)(current MVexp)
TVexp	(2.5)(current TVexp)	(0.5)(current TVexp)
RR	current RR + 30	current RR - 2
$EtCO_2$ (% or kPa)	current $EtCO_2$ + 1	current $EtCO_2$ - 1
$EtCO_2$ (mmHg only)	current $EtCO_2$ + 6	current $EtCO_2$ - 6
PEEPe (cmH2O, mbar)	current PEEP + 5	current PEEP - 5
PEEPe (kPa)	current PEEP + 0.5	current PEEP - 0.5

Default limits

Selecting ***Default Limits*** will change all of the alarm limits to the facility default settings.

Leak Limit

The ***Leak Limit*** setting determines what size leak is allowed before a leak alarm condition is activated. The setting is a percentage of the total volume delivered to the patient. Leak Limit may be set to Off.

Using snapshots

Taking a snapshot

Use the Take Snapshot feature to capture the waveform clips, active alarms, measured parameters, and ventilator settings that are currently on the display. The three most recent shapshots are held in the memory. If a fourth snapshot is saved the oldest snapshot will be deleted. A message in the general message field indicates the snapshot recorded. Three pages of information is recorded for each snapshot.

Push **Take Snapshot** to record a snapshot.

Viewing a snapshot

1. Push **Trends**.
2. Select ***Snapshot***.
3. The most recent snapshot will show in the right side menu.
   - Select ***Next Page*** to scroll through the three pages of snapshot information.
   - Continue to scroll to the next page to view additional snapshots that have been saved to the memory.
   - Select ***Cursor*** to view the waveform values.

Viewing trends

The views for patient trends are graphical, snapshot, numerical, and settings. The settings view will show SBT in the mode column when the Spontaneous Breathing Trial (SBT) is active. The settings view will show S-PCVG when SIMV-PCVG is active and BiLev-VG when Bilevel-VG is active.

Trend information will automatically be saved every five minutes for the most recent 48 hours of data and every 30 minutes for data from 48 hours to 14 days.

1. Push **Trends**.
2. Select the desired view.
   - The arrow identifies the current trend view.
3. Select ***Cursor*** to scroll through the current trend view.
4. Push the ComWheel to return the highlight to ***Cursor***.
5. Select ***Next Page*** to view additional parameters or snapshots.

Trends split screen

Trends are also available as a split screen view. Split screen trends will show a small graphic trend of the displayed waveforms for 120 minutes of data.

Displayed waveform	Trend displayed
Paw	Ppeak, Pplat
Flow	MVexp
Volume	Spont MV, Spont RR
Paux	Paux peak
CO2	EtCO2, RR
O2	EtO2, FiO2

Viewing spirometry loops

There are three types of spirometry loops:

- Pressure-Volume (P-V)
- Flow-Volume (F-V)
- Pressure-Flow (P-F)

Spirometry loops may be viewed through a menu or as a split screen. The loop type displayed may be selected in the ***Spirometry*** or ***Spirometry Setup*** menu.

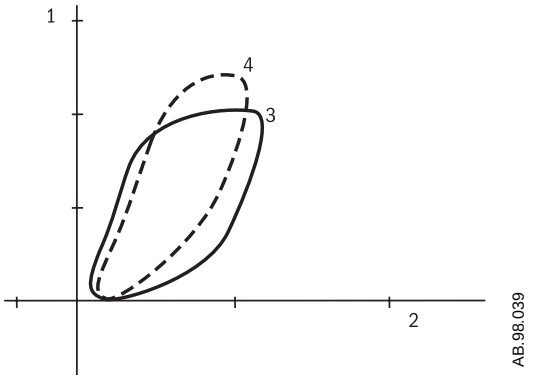

1. Volume axis
2. Pressure axis
3. Real time loop
4. Reference loop (appears on display in white)

Figure 4-1 • Example of a P-V loop

Sensor type

Sensor Type refers to the style of airway adapter used with the airway module. If spirometry data is to be obtained from the airway module, ensure the Sensor Type matches the airway adapter used. If an airway module is not installed, ***Sensor Type*** will not be selectable.

If the Sensor Type is not set correctly the information displayed may not be accurate.

1. Push **Spirometry**.
2. Select ***Spiro Setup- Sensor Type***.
3. Select ***Adult*** or ***Pedi*** depending on the sensor used.
   - Adult refers to the D-lite sensor.
   - Pedi refers to the Pedi-lite sensor.

Spirometry menu

Loops may be saved, viewed, and erased in the ***Spirometry*** menu.

- Push **Spirometry**.
  - To view a specific loop type; select ***Loop Type*** and the desired view.
  - To store a loop to memory; select ***Save Loop.***
  - To view a saved loop; select ***Reference Loop*** and the time at which the loop was saved.
  - To erase a saved loop; select ***Erase Loop*** and the time at which the loop was saved.

Using the cursor

The cursor is an easy way to quickly read the volume and pressure of the spirometry loop.

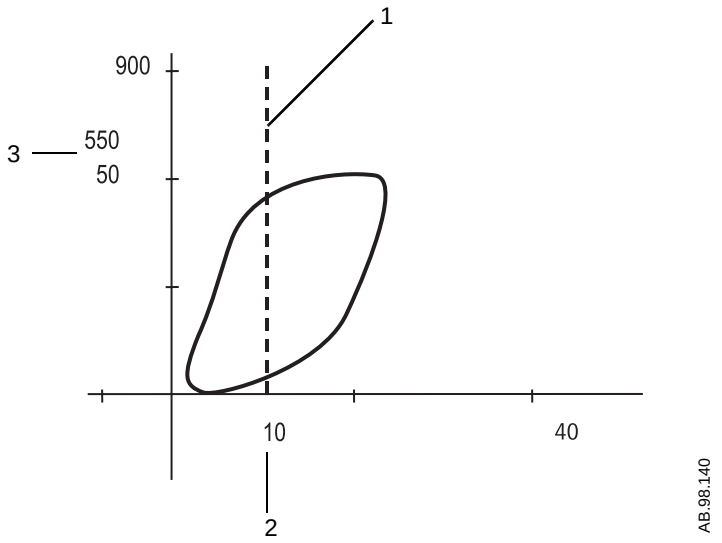

1. Cursor
2. Pressure point of intersection
3. Volume points of intersection

Figure 4-2 • Cursor view

1. In the ***Spirometry*** menu, select ***Cursor***.
2. Turn the ComWheel to move the cursor across the graph.
   - The volume points of intersection show in top to bottom order at the left of the graph.
   - The pressure point of intersection shows below the graph.
3. Push the ComWheel to remove the cursor from the graph.

Spirometry split screen

Spirometry loops may be viewed alongside the waveforms on the normal screen. To set up the split screen, follow these steps.

1. Push **Spirometry**.
2. Select ***Spiro Setup***.
3. Select ***Split Screen - Spiro***.
4. Push **Normal Screen**.

Performing procedures

↑ O2

Increased oxygen may be delivered for two minutes. A general message appears with the time remaining. If delivery is not manually stopped it will automatically end after two minutes.

1. Push ↑ **O2**.
2. The O_2 concentration can be adjusted to a level less than 100% by turning the ComWheel and confirming the setting.
3. Push ↑ **O2** to resume the previous setting for O_2 before the two minutes has elapsed.

Suction

When the Suction procedure is activated:

- The system delivers 100% O_2 for 2 minutes or until the patient is disconnected.
- The system goes into Standby for 2 minutes or until the patient is reconnected.
- The system begins ventilating at the current settings delivering 100%O_2 for 2 minutes.

Note If the patient is not disconnected during the first 100% O_2 phase, the suction procedure will cancel.

Note The suction procedure is not meant for in-line suction because it requires that the patient be disconnected in order for the procedure to move to the next phase.

1. Push **Procedures**.
2. Select ***Suction***.
3. The system will deliver 100% O_2 for 2 minutes or until the patient is disconnected.
4. Disconnect the patient. Suction the patient.
   - A medium priority alarm will sound once with no message.
   - The system will enter Standby mode for 2 minutes or until the patient is reconnected.
5. Reconnect the patient to resume ventilation. The system will deliver 100% O_2 for 2 minutes.

Note To stop an active suction procedure during 100% O_2 delivery, push **Procedures** and select ***Suction*** or push ↑ **O2**.

Nebulizer

The system operates with the Aeroneb Pro Nebulizer System by Aerogen. See the *"Setup and Connections"* section for assembly information.

CAUTION Do not insert an airway module into the module bay until at least one minute after a nebulizer procedure. Aerosolized medication may damage the D-fend or interfere with the airway module measurements.

Note Gas sampling and monitoring is suspended while the nebulizer is in use.

Important When the O_2 waveform is displayed, the measurement for FiO_2 will become invalid when the nebulizer is on or the module is warming up. To view the correct value for FiO_2 during this time, remove the O_2 waveform from the display by selecting **System Setup -** ***Screen Setup - Wave Field 3*** and choosing a waveform other than O2.

Nebulization can be set for a specific delivery time or for the volume of medication delivery. The nebulizer will begin and continue for the length of time or volume selected. A general message appears with the amount of nebulization time remaining.

Note If the nebulizer is dry, it may start and stop intermittently for up to the first minute of operation. To prevent this, turn the nebulizer off when the medication has been completely dispensed.

Follow these steps to deliver nebulized medications to the patient.

1. Push **Nebulizer**.
2. Select ***Volume*** or ***Time*** and change to the desired value.
3. To deliver multiple nebulizer cycles, set the number of cycles and the ***Pause Time*** between cycles.
4. Select ***Start***.
5. To end before selected time, select **Nebulizer** - ***Stop***.

Manual Breath

An additional breath may be delivered to the patient by selecting **Procedures** - ***Manual Breath***. The system requires a 0.25 second pause between delivery of manual breaths. This breath will be based on the settings for the current mode. Manual Breath is not available in CPAP/PSV mode.

Intrinsic PEEP

The Intrinsic PEEP procedure will stop the flow of gas at the end of expiration and measure the airway pressure when the lung equilibrates with the circuit pressure. Intrinsic PEEP is the amount of pressure remaining above the PEEP value.

The result of the measurement appears in the measured value field of the Paw waveform. It remains displayed for 15 minutes. The result will also appear in the Procedures menu along with a time stamp. It will remain here until the procedure is selected again, or until the ventilator is put into Standby.

Note If the Data Source is set to Mod, the value for Intrinsic PEEP will not appear in the measured value field of the Paw waveform.

A general message appears while the intrinsic PEEP value is being calculated.

Follow these steps to obtain an Intrinsic PEEP measurement.

1. Push **Procedures**.
2. Select ***Intrinsic PEEP***.
   - The system will attempt to measure Intrinsic PEEP at the end of each controlled breath during a 30 second time period. If unsuccessful, then the procedure is cancelled.
   - Spontaneous breath triggers or activation of other procedures may cause an unsuccessful measurement.
   - The affects of breathing circuit compliance are accounted for in the Intrinsic PEEP measurement.

PEEPi Volume

Selecting Intrinsic PEEP will also calculate the PEEPi Volume. This is the approximate volume of air trapped in the lungs at the time the Intrinsic PEEP procedure is activated. PEEPi Volume is calculated from the current compliance and PEEPi measurement.

If PEEPi Volume cannot be calculated when Intrinsic PEEP is selected, - - - will be displayed.

PEEPi Volume is abbreviated as P Vol in the trend pages.

P 0.1

This procedure reflects neuromuscular activation of the patient during spontaneous breathing. P 0.1 measures the airway occlusion pressure 0.1 second after beginning an inspiratory effort against an occluded airway. It can be used as an indication of whether a patient is ready to be weaned.

A general message appears while the P 0.1 value is being measured. The result will appear in the Procedures menu along with a time stamp. It will remain here until the procedure is selected again, or until the ventilator is put into Standby.

Follow these steps to obtain a P 0.1 measurement:

1. Push **Procedures**.
2. Select ***P 0.1***.

Inspiratory Hold

When Inspiratory Hold is selected, the inspiratory and expiratory valves close for 10 seconds at the end of the next inspiratory phase. This function can be used during x-ray procedures or to determine plateau pressure and static compliance calculations. The hold cannot be repeated until the patient triggers a spontaneous breath or the ventilator delivers a mandatory breath.

Follow these steps to start an Inspiratory Hold:

1. Push **Procedures**.
2. Select ***Inspiratory Hold***.

Note To stop an active inspiratory hold, push the ComWheel.

Expiratory Hold

When Expiratory Hold is selected, the inspiratory and expiratory valves close for 5 seconds at the end of the next expiratory phase. This function can provide the ability to measure the end expiratory lung pressure and may be used for static compliance measurements. The hold cannot be repeated until the patient triggers a spontaneous breath or the ventilator delivers a mandatory breath. If the patient creates an airway pressure more negative than the set PEEP -2cmH2O or when a pressure trigger is reached (whichever is more negative), the ventilator will end the hold and deliver a breath.

Follow these steps to start an Expiratory Hold:

1. Push **Procedures**.
2. Select ***Expiratory Hold***.

Note To stop an active expiratory hold, push the ComWheel.

Spontaneous Breathing Trial (SBT)

The Spontaneous Breathing Trial (SBT) is used to assess a patient's ability to wean.

This procedure will place the ventilator in CPAP / PSV mode at the settings defined in the SBT menu. Alarm limits for tidal volume, apnea time, minute volume, respiratory rate, and low peak pressure can also be set in this menu.

If the minute volume or respiratory rate alarm limits are exceeded during the SBT, the trial will immediately end and the ventilator will return to the previous mode and settings. A window will appear with a selection to return to the SBT or to continue ventilation with current settings (previous to SBT).

The SBT Split Screen displays the MVexp, RR, and $EtCO_2$ for the trial. The trial results will remain in the split screen until the next trial is run.

A general message appears while the SBT is running indicating the amount of time remaining in the trial.

The trial will automatically end at the time set and the ventilator will return to the previous mode and settings. An informational alarm will appear when there are 2 minutes remaining in the SBT.

Start SBT

1. Push **Procedures**.
2. Select ***Spont. Breath. Trial***.
3. To change the ventilation settings and alarm limits, select ***Adjust Settings***.
4. Ensure the time is correct. Time may be set from 2 to 120 minutes.
5. To view a SBT trend, select ***Split Screen*** - ***SBT***.
6. Select ***Start*** to begin.

Stop an active SBT

To stop an active SBT before the time expires:

1. Push **Procedures**.
2. Select ***Spont. Breath. Trial***.
3. To return to the previous mode and settings, select ***Stop***.
4. To continue with the current CPAP / PSV settings, select ***Adopt Settings***.

Rapid Shallow Breathing Index (RSBI)

The Rapid Shallow Breathing Index (RSBI) is used to assess whether the patient is ready to begin the weaning process. The RSBI can be displayed in the Volume measured value field or in the Volume digit field. RSBI is calculated using spontaneous breath rate/TV (averaged over 1 minute).

1. Push **System Setup**.
2. Select ***Screen Setup***.
3. Set the ***Wave Field 3*** or ***Digit Field*** to ***Vol***.

EVair 03 compressor operation

The power switch must be on for the compressor to operate as either the primary or reserve air supply. The green indicator light should be lit. Refer to *"Setup and Connections"* for pre-use instructions.

Primary supply

When used as the primary air supply, the pump will run continuously regardless of the ventilator demand. The pump pressure gauge will indicate the air pressure supplied to the ventilator, nominally about 500 kPa (80 psi). The pipeline pressure gauge will indicate no pressure.

Reserve supply

When used as a reserve air supply, a pipeline medical air supply must be connected to the compressor pipeline air inlet. The pump will not run as long as the pipeline air supply is maintained above a pressure of approximately 280 kPa (41 psi). If the pipeline air supply fails or the pressure drops below 250 kPa (36 psi), the compressor will turn on automatically. Reestablishing the air pipeline supply to a pressure greater than 280 kPa (41 psi) will switch the compressor back to standby. This pressure difference will minimize the cycling of the compressor between on and standby when the air supply pressure is low and unreliable.

The compressor has a 1.5 liter reservoir at the outlet which can supply the ventilator with a peak flow of 160 l/min or more for short durations. The reservoir is common to both the pipeline and the compressor air supplies.

5 Airway Modules

In this section

Compact airway modules 5-2
Connection to a patient 5-4
Gas exchange 5-6
Patient spirometry 5-7
Gas calibration 5-8

Compact airway modules

The optional compact airway modules measure and monitor gases delivered to the patient and exhaled through the breathing circuit.

The modules consist of nondispersive infrared technology for measuring CO_2 , N_2O, and anesthetic agents; paramagnetic technology for measuring O_2; differential pressure techniques for measuring spirometry inputs from the D-lite sensor; and a D-fend water separation system.

Several parameters may be measured by either the internal ventilator sensors or by the airway module. When the module is selected as the primary source, or the only source for specific data, the module data indicator will appear in the specific data area.

Monitoring that is critical to patient safety will come from both the ventilator and the compact airway module regardless of the data source selection. In rare circumstances, alarms may be triggered by the internal sensors even though the values displayed are from the module sensors. Refer to the "*Troubleshooting"* section for more information.

Important When the O_2 waveform is displayed, the measurement for FiO_2 will become invalid when the nebulizer is on or the module is warming up. To view the correct value for FiO_2 during this time, remove the O_2 waveform from the display by selecting **System Setup -** ***Screen Setup - Wave Field 3*** and choosing a waveform other than O_2.

CAUTION Use only cables and accessories approved by Datex-Ohmeda. Other cables and accessories may damage the system or interfere with measurement. Single-use accessories are not designed to be reused.

This system is compatible with the E series modules E-miniC, E-CO, E-COV, E-COVX, E-CAiO, E-CAiOV, and E-CAiOVX and the M series modules M-miniC, M-CO, M-COV, M-COVX, M-CAiO, M-CAiOV, and M-CAiOVX. (Modules must be software version 3.2 and above. E-miniC and M-miniC modules must be software version 1.0 and above.) Letters in the compact airway modules stand for:

- E = plug-in gas module
- M = plug-in gas module
- C = CO_2 (and N_2O in compact gas modules)
- O = patient O_2
- V = patient spirometry
- X = gas exchange
- A = anesthetic agents
- i = agent identification

Important The EC is not intended for use with anesthetic agents. It does not currently measure or display anesthetic agents.

Early versions of the EC software will not allow both the top and bottom connection ports of the module bay to be used simultaneously. Models with this restriction will have caps placed over the lower connection ports on the inside of the module bay. These caps will be removed by a Datex-Ohmeda authorized service representative when the software is upgraded to a level that accepts modules in both sections of the module bay.

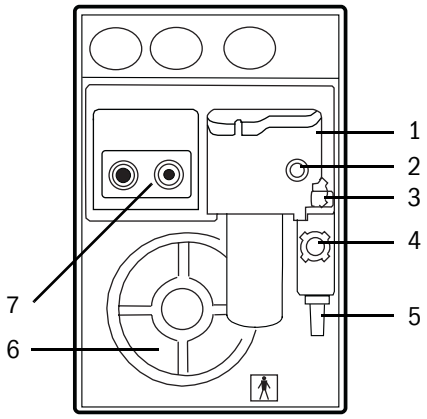

1. D-fend water trap
2. Sampling line connector
3. Water trap latch
4. Reference gas inlet
5. Sample gas outlet
6. Cooling fan
7. Spirometry sensor connectors

Figure 5-1 • Compact airway module

D-fend water trap

The D-fend water trap of the airway modules is based on a hydrophobic membrane, which prevents water and secretions from entering the measuring chamber. Condensed water and secretions are collected into a washable container.

The green D-fend+ is for patients with extensive mucus secretion and for single patient use only. Replace it every 24 hours or when a message ‘Sample line blocked’ or ‘Replace D-fend’ persists.

Important D-fend alarm message instructions stay on the display in the waveform field until the condition is resolved and **Normal Screen** is pushed to clear the message.

- Check D-fend
- Check sample gas out

Emptying the water trap

1. To remove the D-fend water trap, push the water trap latch to the right. The water trap is spring-loaded. The message, ‘Check D-fend’ appears.
2. Detach the container from the water trap cartridge by pulling it carefully downward.
3. Empty and clean the container.
4. Attach the container tightly back into the cartridge.
5. Push the whole unit into its housing on the front panel until the latch is set.

Connection to a patient

1. Check that the airway gas module is properly installed. The module may be installed at any time, but the measurements will not be available until after the module has warmed up.
2. Check that the airway adapter connections are tight and that the adapter is operating properly.
3. Check that the water trap container is empty and properly attached.
4. Attach a new gas sampling line to the water trap.
5. Ensure the system switch is on. ‘Zeroing’ appears if the CO_2 waveform is displayed.

6. When ‘Zeroing’ disappears, connect the loose end of the sampling line to the airway adapter. Take the gas sample as close to the patient’s airway as possible. Position the adapter’s sampling port and spirometry port upwards to prevent condensed water from entering the sampling line

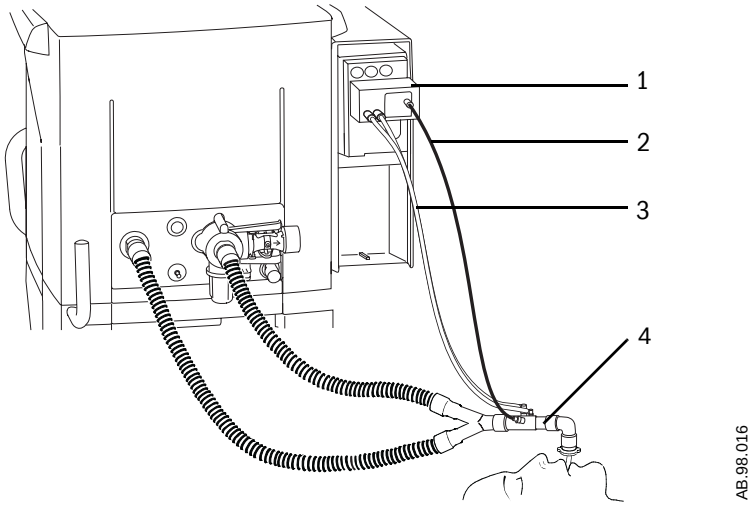

1. Module
2. Gas sampling line
3. Spirometry line (optional)
4. Spirometry airway adapter (optional)

Figure 5-2 • Breathing circuit setup with compact airway module

WARNING Do not place the airway module in the lower slot when the airway module bay is on the right side of the system. Exhaust from gas exhaust port will adversely affect the airway gas module accuracy. The CO_2 and O_2 measurements from the module will be inaccurate.

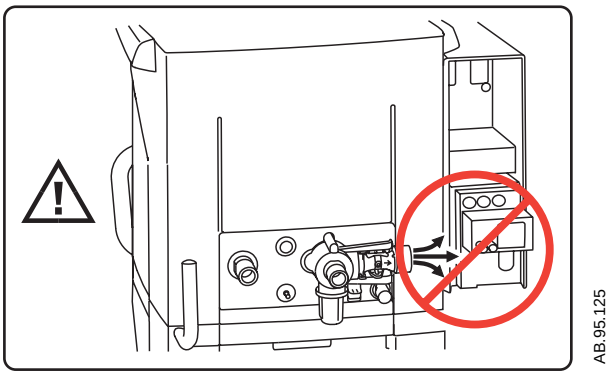

Gas exchange

The Datex-Ohmeda compact airway modules with the gas exchange option (E-COVX, E-CAiOVX, M-COVX, M-CAiOVX) will allow for the monitoring of airway gases, patient spirometry, O_2 consumption, CO_2 production, energy expenditure and respiratory quotient.

The patient's height and weight must be entered to calculate the O_2 consumption per kg or m^2, and to calculate the CO_2 production per kg or m^2.

1. Push **System Setup**.
2. Select ***Parameters Setup*** - ***Gas Exch. Setup***.
3. Enter patient's height and weight. Body surface area will be automatically calculated based on the values for height and weight.

To obtain the O_2 consumption of a patient, the module measures the amount of oxygen that is inhaled and subtracts the amount exhaled from it. Respectively, the module measures the CO_2 production by subtracting the amount of carbon dioxide inhaled from the amount exhaled. These amounts can be obtained by multiplying each measured volume sample by the corresponding gas concentration.

Measurement limitations

- The gas exchange measurement does not function with a leaking endotracheal tube.
- The gas exchange measurement does not function when the ventilator bias flow is greater than 10 l/min.
- For continuous monitoring, use the HME(F) for humidification or use the D-lite+. The condensed water inside the D-lite may distort the volume readings.
- When FiO2 measures greater than 85% gas exchange values become invalid.
- When respiratory rate measures greater than 35 breaths per minute for D-lite and 50 breaths per minute for Pedi-lite, spirometry and gas exchange values become invalid.
- For the best measurement results, it is recommended to use:
  - a two-meter gas sampling line
  - a bacterial filter at the expiratory inlet
  - a straight patient wye.

Patient spirometry

Modules with patient spirometry enable monitoring of the ventilator operation and the patient respiratory status.

The airway pressures are to be measured between the patient wye and patient airway, using the D-lite and Pedi-lite sensors. These sensors can be used for gas sampling.

The sensors are designed to measure kinetic pressure by a two-sided Pitot tube. The pressure differences across a flow restrictor together with the gas concentration information is used to calculate flow. The volume information is obtained by integrating the flow signal.

Note With spontaneous breaths, PEEPi, compliance, and airway resistance are not measured. With pressure supported breaths, PEEPi and airway resistance are not measured.

Note When using patient spirometry, spontaneous volumes and respiratory rates are not displayed.

Measurement principles

Pplat is the pressure measured at the point where the flow reverses direction, at the end of the inspiration phase, after the inspiratory pause.

Positive End Expiratory Pressure (PEEP) is displayed in two PEEP values: PEEPe (extrinsic PEEP) reflects the PEEP set on the ventilator. PEEPi (intrinsic PEEP) or AUTO PEEP usually indicates incomplete expiration and should be minimized. PEEPe + PEEPi = PEEPtot.

PEEPtot is the pressure in the lungs at the end of expiration, measured at the moment when the expiratory phase changes to inspiratory flow.

Compliance (Compl) is calculated for each breath from the following equation: Compl = TVexp / (Pplat - PEEPe - PEEPi). Compliance indicates the pressure difference needed to deliver a certain volume of gas into the patient’s lungs.

Static measurements

The airway module detects end inspiratory and end expiratory occlusions automatically and calculates the values for static plateau pressure (Static Plat), static extrinsic and intrinsic end expiratory pressures (Static PEEPe+i) and static compliance (Static Compl).

A pause is defined as a period during which the flow stays smaller than 2 l/min and during which the airway pressure changes are smaller than 1 cmH_2O. An end inspiratory/expiratory pause is identified as an occlusion if:

- The inspiratory/expiratory pause lasts at least one second longer than the inspiratory/expiratory pause in normal breaths (comparison is done with the three previous normal breaths).
- The inspiration/expiration time is at least 1.5 seconds.
- During the last minute there have not been more than three spontaneous breaths.

The static compliance is calculated based on the measured static plateau and end expiratory pressure values if:

- End inspiratory and expiratory occlusions are done within 2 minutes of each other.
- Ventilator settings have not changed between the occlusions.
- Dynamic PEEPtot < 2 cmH_2O, Dynamic TV < 15%
- The difference between static plateau and end expiratory pressures is greater than 3 cmH_2O.

Static values are displayed in a separate digit field (Spiro).

Gas calibration

Calibrate compact airway modules once every two months or whenever there are indications of errors in the gas readings. Use the Datex-Ohmeda calibration gas and regulator specified for the module.

WARNING Only use Datex-Ohmeda calibration gas. Do not use any other calibration gases or the calibration will not succeed.

Specific part numbers for calibration gas and regulators are listed below. Several modules use the same gas and regulator style.

E Modules	M Modules	Calibration Gas	Regulator
E-miniC	M-miniC	755587 (US only) 755581	M1006864 (US only) 755534
E-CO	M-CO		
E-COV	M-COV		
E-COVX	M-COVX		
E-CAiO	M-CAiO	755571 (US only) 755583	
E-CAiOV	M-CAiOV		
E-CAiOVX	M-CAiOVX		

During gas calibration% units are used for CO_2 regardless of selected measuring units.

1. Turn on the ventilator. Let the gas module warm up for 30 minutes before starting calibration.
2. Attach the regulator to the calibration gas cylinder.
3. Attach a new sampling line to the water trap. Connect the loose end of the sampling line to the regulator on the calibration gas cylinder.
4. Push **System Setup**.
5. Select ***Parameters Setup - Gas Calibration***. Calibration will begin as soon as the menu item is selected.

6. Wait until ‘Feed Gas’ appears after each gas.
7. Open the regulator and feed calibration gas until the message ‘OK’ or ‘Adjust’ appears.
   - If an error occurs during calibration or if no gas is fed, ‘Cal. Error’ appears after each gas. Push the ComWheel to perform a new calibration.
8. If adjustments are needed:
   - Select the gas to be adjusted and press the ComWheel.
   - Use the ComWheel to change the value until it matches the calibration gas cylinder value.
   - Push the ComWheel to confirm the change.
   - Repeat for each gas requiring adjustment.

6 Alarms and Troubleshooting

CAUTION Repairs should only be attempted by a trained Datex-Ohmeda service representative or by persons having completed Datex-Ohmeda approved service training. Refer to *“Repair policy”* in the *“Cleaning and Maintenance”* section of this manual.

⚠ If an alarm occurs, safeguard the patient first before performing troubleshooting or doing repair procedures.

In this section

Alarms 6-2

List of alarms 6-4

Troubleshooting 6-10

Alarms

Alarms may be high priority, medium priority, or informational. When an alarm occurs during therapy, an alarm tone sounds and the alarm message is displayed in the alarm message field.

Push the **Silence Alarms** key to silence the audible parameter alarm tones. Silencing an alarm stops the audible tone for 120 seconds. Push the key again to reset timer to 120 seconds.

Pushing the **Silence Alarms** key when no medium or high priority alarms are active suspends audible parameter alarm tones for medium and high parameter alarms for 120 seconds. Push the key again to cancel the alarm suspend timer.

Alarm help is available for any recent or active alarms. Push **Help** to view the cause and action of the alarms.

Alarm priorities

Alarm priority is indicated by the color of the alarm message and the alarm LED located next to the **Silence Alarms** key.

High-priority alarm messages appear in white text on a red background. During a high-priority alarm, the red LED flashes. A high-priority alarm consists of a series of 5 tones.

If a high-priority alarm is not silenced or resolved within the time set in the High Alert Audio menu item in the Alarms Setup menu, the pitch, volume and tone of the alarm will automatically increase to the maximum level.

Medium-priority alarm messages appear in yellow text on a gray background. During a medium-priority alarm, the yellow LED flashes. A medium-priority alarm consists of a series of 3 tones.

Informational alarms appear in white text on a gray background. During an informational alarm, the yellow LED is on solid. Informational alarms consist of a single tone.

When a high-priority alarm is active at the same time as a medium-priority alarm, the red and yellow LEDs flash. When a high-priority alarm is active at the same time as an informational alarm, the red LED flashes, and the yellow LED is on solid. When a medium-priority alarm is active at the same time as an informational alarm, the yellow LED flashes.

Pushing the **Silence Alarms** key keeps the LEDs from flashing, the audio tones from sounding, and de-escalates some medium-priority alarms until the end of the alarm silence. Alarm text will still be displayed after **Silence Alarms** has been pushed.

Some alarms continue to display an alarm message after the condition has cleared. These alarms are resolved and may be cleared by pushing **Silence Alarms**. Resolved alarms appear as white messages on a black background.

Display changes during alarms

Messages may appear in waveform fields during some alarms. If more than one alarm has a message, the message for the highest priority alarm is displayed. The message is removed when the alarm is cleared.

Messages for high-priority alarms use red text. Messages for medium-priority alarms use yellow text. Informational alarms use gray text.

The color and fill amount of the battery in use symbol indicates the amount of battery power remaining. Green indicates greater than 10 minutes of battery power remaining. Yellow indicates between 5 and 10 minutes battery power remaining. Red indicates less than five minutes of battery power remaining.

Internal failure

‘System failure. Service required.’ will show on the display during a software or hardware failure detected by the system. If this message occurs, contact a Datex-Ohmeda trained service representative.

The system will show one of the following messages if a hardware failure is detected while the system is powering up:

- CMOS battery failed. Replace soon.
- Alarm tone detection failed.
- ECC failed.
- Critical hardware failure.
- OS/App ROM CRC failed.
- RTC failed.

The system will show one of the following messages if a hardware failure is detected during therapy or while the system is powering up:

- System reset.
- VCB/VMB failed state.

If any of these messages appears, discontinue use and contact a Datex-Ohmeda trained service representative.

Backup audio buzzer

The EC is equipped with a backup audio buzzer. If both the primary and backup audio tones do not sound when the ventilator is powered up, take the ventilator out of service and contact a Datex-Ohmeda trained service representative.

List of alarms

If the corrective action does not resolve the alarm message, contact a Datex-Ohmeda trained service representative.

Alarms messages with an * after the priority in the table continue to display an alarm message after the condition has cleared.

Message	Priority	Potential Cause	Action/Concerns
Air supply pressure high	Informational	Air supply pressure > 655 kPa (95 psi).	Ensure the primary air source is < 655 kPa (95 psi). Switch to 100% O_2.
Air supply pressure low	Medium*	Air pipeline pressure < 168 kPa (24.3 psi).	Ensure the primary air source is properly connected and > 168 kPa (24.3 psi). Switch to 100% O_2.
Air temp high	High	Air supply temperature ≥ 48°C.	Check compressor filter, clean if needed. Switch to 100% O_2.
Air temp sensor error	Informational	Air temperature sensor measurement is out of range.	Switch to 100% O_2.
Apnea	High*	Apnea time exceeds 60 seconds or apnea time period, whichever is less.	Check for leaks in the patient circuit. Check for patient disconnection.
Backup audio failure	Medium	Secondary speaker failure.	Contact a Datex-Ohmeda trained service representative.
Backup mode active	Medium	Spontaneous breathing is insufficient.	Ensure the patient's spontaneous breathing and ventilatory support is adequate.
Breathing circuit occlusion	High*	The difference between inspiratory and expiratory pressure is > 10 cmH_2O.	Check for a foreign body or occlusion in the patient circuit.
Cannot calculate FRC	Informational	The last attempted FRC measurement could not be completed.	Ventilation setting changes stop an FRC measurement. Ensure the airway module is available and active. Stop any active procedures. Start a new FRC measurement.
Check D-fend	Informational or Medium	The sample line or the D-fend water trap is not installed.	Ensure D-fend water trap is properly placed and the sample line is connected. When the alarm is resolved, wait 30 seconds and push **Normal Screen** to clear the Alarm message.
Check sample gas out	Informational or Medium	Possible blockage in airway module sample gas outlet.	Check for blockage in the airway module sample gas outlet. When the alarm is resolved, wait 30 seconds and push **Normal Screen** to clear the Alarm message
Circuit leak?	High*	Expired tidal volume < set Leak Limit.	Check for leaks in the patient circuit. Appropriately set the Leak Limit in the Alarms Setup menu. Clean expiratory flow sensor.
Circuit leak alarm off	Informational	Leak limit setting is turned off.	Ensure the Leak Limit is appropriate for the patient's condition.
Clean neo flow sensor	Medium	Neonatal flow sensor is contaminated with debris.	Clean or replace neonatal flow sensor.

Message	Priority	Potential Cause	Action/Concerns
Connect nebulizer	Informational	Nebulizer cable not attached to ventilator when nebulization function is activated.	Connect nebulizer cable and nebulizer.
Controls frozen. Need service.	High	Electronic communication between the ventilator and the display unit are interrupted.	Use alternate source of ventilation. Turn ventilator off and back on.
Display fans failed	Medium	The display unit cooling fans have failed.	Contact a Datex-Ohmeda trained service representative.
EtCO2 high	High*	End tidal CO_2 > high alarm limit.	Ensure the ventilator settings are set appropriately for the patient's condition and that the high alarm setting value is correct.
EtCO2 low	High*	End tidal CO_2 < low alarm limit.	Ensure the patient is properly intubated. Check for leaks or blockages in the patient circuit. Ensure the ventilator settings are set appropriately for the patient's condition and that the low alarm setting value is correct.
EtO2 high	Medium*	End tidal oxygen > high alarm limit.	Check if additional O_2 flow is being added to the patient circuit. Ensure the ventilator settings are set appropriately for the patient's condition and that the high alarm setting value is correct.
EtO2 low	Medium*	End tidal oxygen < low alarm limit.	Ensure the sampling line is connected correctly. Ensure the ventilator settings are set appropriately for the patient's condition and that the low alarm setting value is correct.
Exp flow sensor error	Medium	Expiratory flow sensor is not reading correctly.	Check if additional O_2 flow is being added to the patient circuit. Clean or replace expiratory flow sensor.
Exp flow sensor failure	High	Ventilator is not receiving data from the expiratory flow sensor.	Run the Checkout to recalibrate the expiratory flow sensor. Replace flow sensor if necessary.
Fans require service	Medium	The ventilator unit or power module fans have failed.	Check ventilator unit filter, clean if necessary. System may overheat if both fans fail.
FiO2 control error	Medium	Data from air flow sensor or O_2 flow sensor is out of range.	Run the Checkout to recalibrate the air and oxygen flow sensors.
FiO2 high	High*	Inspired fraction of oxygen > high alarm limit when set FiO2 is less than 100%.	Check if additional O_2 flow is being added to the patient circuit. Ensure the ventilator settings are set appropriately for the patient's condition and that the high alarm setting value is correct.
FiO2 low	High*	Inspired fraction of oxygen < low alarm limit.	Ensure the ventilator settings are set appropriately for the patient's condition and that the low alarm setting value is correct.
FRC series stopped	Informational	The O2 setting was changed during an FRC series interval to within 10% of the FRC O2 setting.	An FRC series will stop if at least a 10% difference is not maintained.
Internal power failure	Medium	Ventilator is on AC mains power, but backup battery power is not guaranteed.	If AC mains power is lost, the battery will not work and the ventilator will shutdown.

Message	Priority	Potential Cause	Action/Concerns
Missed scheduled FRC	Informational	A series FRC measurement could not be started.	Ventilation setting changes stop an FRC measurement. Ensure the airway module is available and active. Stop any active procedures. The FRC measurement will attempt at the next scheduled interval.
Mixed gas temp sensor error	Informational	Total flow temperature sensor measurement is out of range.	Contact a Datex-Ohmeda trained service representative.
Module fail. No CO2, O2 data.	Medium	Airway module hardware failure.	Replace module.
Module not compatible	Informational	The airway module detected is not compatible with system software.	Remove the incompatible module.
MVexp high	High*	Expired minute volume > high alarm limit.	Ensure the ventilator settings are set appropriately for the patient's condition and that the high alarm setting value is correct.
MVexp low	High*	Expired minute volume < low alarm limit.	Ensure that the ventilator settings are set appropriately for the patient's condition and that the low alarm setting value is correct.
Negative airway pressure	High*	Ventilator senses a patient inspiration < -10 cmH_2O.	Check for blockages in the patient circuit.
Neo flow sensor error	High	Neonatal flow sensor is not reading correctly.	Check if additional flow is being added to the patient circuit. Clean or replace neonatal flow sensor.
Neo flow sensor Off	Medium	Neo Flow Sensor has been turned Off.	Turn On the neonatal flow sensor in the ***Neo Flow Sensor Setup*** menu. Volume monitoring is disabled while neonatal flow sensor is turned off. Volume control, volume monitoring, and flow monitoring are not available when the neonatal flow sensor is turned off.
Neo flow sensor reversed	High	Neonatal flow sensor is not installed correctly.	Switch the orientation of the neonatal flow sensor. Reconnect the neonatal flow sensor. Clean or replace the neonatal flow sensor.
No battery backup	Medium	Battery is disconnected, missing, or has failed.	If AC mains power is lost the battery will not work and the ventilator will shutdown.
No battery backup?	Medium	Communication between the power controller and the display is lost.	If AC mains power is lost the battery may not work.
No D-lite sensor?	High	The module is not detecting any pressure or flow measurements.	Ensure the D-lite sensor is properly connected in the patient circuit. Change the ***Data Source*** to ***Vent*** in the ***Parameters Setup*** menu.
No exp flow sensor	High	Exhalation flow sensor not connected.	Install expiratory flow sensor. Replace the flow sensor if necessary.
No gas supply pressure	High	Both O_2 and Air supply pressures < 168 kPa (24.3 psi).	Ensure correct O_2 and Air connections. Start compressor if available.

Message	Priority	Potential Cause	Action/Concerns
No neo flow sensor	High	Neonatal flow sensor not connected while ventilating.	Ensure neonatal flow sensor is properly connected. Replace the neonatal flow sensor. Turn off the ***Neo Flow Sensor*** in the ***Neo Flow Sensor Setup*** menu. Volume monitoring is disabled while the neonatal flow sensor is disconnected or turned off. Volume control, volume monitoring, and flow monitoring are not available when the neonatal flow sensor is turned off.
No neo flow sensor	Informational	Neonatal flow sensor not connected while in Standby.	Ensure neonatal flow sensor is properly connected. Replace the neonatal flow sensor. Turn off the ***Neo Flow Sensor*** in the ***Neo Flow Sensor Setup*** menu. Volume monitoring is disabled while the neonatal flow sensor is disconnected or turned off. Volume control, volume monitoring, and flow control are not available when the neonatal flow sensor is turned off.
O2 sensor failure	Medium	Data from the O_2 sensor is out of range.	Run the Checkout to recalibrate O_2 sensor.
O2 supply pressure high	Informational	O_2 supply pressure > 655 kPa (95 psi).	Ensure the primary O_2 source is > 655 kPa (95 psi). Switch to Air.
O2 supply pressure low	Medium*	O_2 supply is < 168 kPa (24.3 psi).	Ensure the primary O_2 source is properly connected and > 168 kPa (24.3 psi). Switch to Air.
O2 temp sensor error	Informational	Oxygen temperature sensor measurement is out of range.	If the system does not return to the set FiO2, switch to Air.
On battery	Medium	AC Mains power is not available. Ventilator is powered by battery.	Plug power cord in.
Pair sensor out of range	Informational	Air supply pressure sensor measurement is out of range.	Contact a Datex-Ohmeda trained service representative.
Patient connected?	High	The ventilator senses a patient attached to the circuit while in Standby.	Start ventilation or disconnect patient from circuit.
Patient connection leak?	High*	Expired tidal volume < set Leak Limit	Check for leaks at the patient connection of the circuit. Appropriately set the ***Leak Limit*** in the ***Alarms Setup*** menu.
Patient disconnected	High*	Patient circuit is disconnected from the ventilator.	Reconnect the patient to the ventilator.
Paux high	Medium	Auxiliary pressure > 100 cmH_2O.	Check for blockages in the tubing. Ensure Purge Flow is turned off when connected to a close-ended system.
Paux sensor out of range	Informational	Auxiliary pressure sensor measurement is out of range.	Disconnect auxiliary pressure tubing and zero Paux sensor.
Pbaro sensor out of range	Informational	Barometric pressure sensor measurement is out of range.	Contact a Datex-Ohmeda trained service representative.

Message	Priority	Potential Cause	Action/Concerns
PEEPe High	Medium	PEEPe > high alarm limit	Ensure the ventilator settings are set appropriately for the patient's condition and that the high alarm setting value is correct.
PEEPe Low	Medium	PEEPe < low alarm limit.	Ensure that the ventilator settings are set appropriately for the patient's condition and that the low alarm setting value is correct.
PEEPi High	Medium	PEEPi high > high alarm limit.	Ensure the ventilator settings are set appropriately for the patient's condition and that the high alarm setting value is correct.
Pexp sensor out of range	Informational or High*	Expiratory pressure sensor measurement is out of range.	Run the Checkout to zero the expiratory pressure sensor. Check for blockages in the patient circuit.
Pinsp sensor out of range	Informational or High*	Inspiratory pressure sensor measurement is out of range.	Run the Checkout to zero the inspiratory pressure sensor. Check for blockages in the patient circuit.
Plimit reached	Medium	Plimit value has been approached for three consecutive breaths.	Ensure the Plimit and TV settings are appropriate for the patient's condition.
PO2 sensor out of range	Informational	Oxygen supply pressure sensor measurement is out of range.	Contact a Datex-Ohmeda trained service representative.
Ppeak high	High*	Airway pressure > Pmax alarm limit.	Ensure the circuit is not obstructed and the ventilator setting values are appropriate. Ensure the Pmax setting is correct.
Ppeak low	High*	Airway pressure < Pmin + Low Ppeak for 15 seconds or 1 mechanical breath, whichever is greater.	Ensure the circuit is connected to the patient's airway. Ensure there are no leaks or disconnections in the circuit. Ensure the ventilator setting values are correct. Appropriately set the Low Ppeak alarm limit in the Alarms Setup menu.
Pressure sensor failure	High	Pexp - Pinsp > 10 cmH_2O.	Run the Checkout to recalibrate the pressure sensors.
Primary audio failure	High	Speaker failure.	Contact a Datex-Ohmeda trained service representative.
Relief valve failure	High	Relief valve failed during Checkout.	Run the Checkout to retest the relief valve.
Relief valve opened	High*	High Paw detected. Ventilator automatically opens relief valve to release pressure.	Ensure the circuit is not obstructed and the ventilator setting values are appropriate. Ensure the Pmax setting is correct.
Remove airway module	Informational	The airway module detected is not compatible with system software.	Remove the incompatible module.
Replace D-fend	Informational	Residue is built up in D-fend filter.	Replace D-fend.
Replace neo flow sensor	High	Ventilator is receiving invalid data from the neonatal flow sensor.	Replace neonatal flow sensor.
RR high	Medium*	Respiratory rate > high alarm limit.	Ensure that the ventilator settings are set appropriately for the patient's condition and that the high alarm setting value is correct.
RR low	High*	Respiratory rate < low alarm limit.	Ensure that the ventilator settings are set appropriately for the patient's condition and that the low alarm setting value is correct.

Message	Priority	Potential Cause	Action/Concerns
Sample line blocked	Informational or Medium	Airway module sample line or water trap is blocked.	Empty water trap. Ensure sample line is not kinked or blocked. Replace sample line if necessary.
SBT ends < 2 min	Informational	The time remaining for the Spontaneous Breathing Trial is less than 2 minutes.	When the SBT time expires the ventilator will return to the previous mode and settings.
Sustained Paw	High*	Inspiratory or expiratory airway pressure sustained at a level 15 cmH_2O higher than the PEEP setting for 15 ± 1.5 seconds.	Ensure the circuit and the gas exhaust port are not obstructed.
System shutdown in < 1 min	High	Remaining battery power is less than 1 minute.	Connect to AC mains power.
System shutdown in < 5 min	High	Remaining battery power is less than 5 minutes.	Connect to AC mains power.
System shutdown in <10 min	High	Remaining battery power is less than 10 minutes.	Connect to AC mains power.
System shutdown in <20 min	High	Remaining battery power is less than 20 minutes.	Connect to AC mains power.
Temp high. Shutdown possible.	High	Ventilator is overheating.	Check ventilator engine filter, clean if necessary.
TV not achieved	Medium	TVinsp < 0.8 TV set or 5 ml, whichever is greater, for six consecutive breaths.	Ensure that the Plimit and TV settings are set appropriately for the patient's condition and that the low alarm setting value is correct.
TVexp high	Medium*	Expired tidal volume > high alarm limit.	Ensure that the ventilator settings are set appropriately for the patient's condition and that the high alarm setting value is correct.
TVexp low	Medium*	Expired tidal volume < low alarm limit.	Ensure that the ventilator settings are set appropriately for the patient's condition and that the low alarm setting value is correct.
Volume delivery error	High	Not receiving data from the total flow sensor.	Contact a Datex-Ohmeda trained service representative.

*These alarms continue to display an alarm message after the condition has cleared.

Troubleshooting

Symptom	Problem	Solution
Mains indicator is not on.	The electrical power cord is not properly connected.	Connect the power cord. Loosen the power cord retaining clamp and ensure plug is fully seated, then tighten the retaining clamp.
	The inlet circuit breaker (switch) is off.	Turn the circuit breaker on.
	The power cord is damaged.	Replace the power cord.
	The electrical outlet the power cord connects to has no power.	Use a different electrical outlet.
	An internal fuse is open.	Have a Datex-Ohmeda trained service representative repair the system.
	Display unit cable is loose.	Turn system switch off and disconnect from AC mains power. Check and tighten the display unit connectors.
System cannot be turned off.	Ventilator is not in Standby.	Set the ventilator to Standby and turn system switch off.
No communication with the compact airway module.	Airway module is not properly installed.	Remove and replace module in the module bay.
	Cable connecting the module bay to the ventilator chassis is loose.	Check and tighten the module bay connectors.
Backup audio alarm sounds.	System failure.	Have a Datex-Ohmeda trained service representative repair the ventilator.
	Display unit cable is loose.	Turn system switch off and disconnect from AC mains power. Check and tighten the display unit connectors.
An alarm appears when the data is within range.	Alarm is from the ventilator but the value displayed is from the airway module.	Calibrate the airway module. Change selection for ***Data Source*** in the ***Parameters Setup*** menu.
	‘Ppeak high’ alarm conditions are checked before the display is updated.	No action required. In certain situations the ventilator will react to a transient high pressure situation before the data can be sampled for display.
Ventilator does not deliver set TV in VCV or SIMV-VC modes.	Plimit setting prevents the full TV from being delivered in the inspiratory period.	Change TV settings. Change the Plimit setting.
Ventilator transitions to Backup mode from CPAP/PSV or BiLevel mode.	‘MVexp low’ or ‘Apnea’ alarm and insufficient patient ventilation.	Change CPAP/PSV or BiLevel settings. Ensure the low MVexp alarm limit is properly set.

Symptom	Problem	Solution
Short delay in the breath cycle at the PEEP pressure level.	Automatic pressure transducer zeroing interference.	No action required. Situation will be corrected when zeroing is complete.
	Automatic flow sensor zeroing after a change to the O_2 setting.	No action required. Situation will be corrected when zeroing is complete.
Ventilator delivers too much pressure in PCV, SIMV-PC or BiLevel modes.	Patient Type does not match the pressure set.	Ensure the Patient Type is set correctly.
Ventilator is automatically triggering a breath.	The breathing circuit leak rate is higher than the flow trigger level.	Check the breathing circuit for leaks. Increase the Flow triggering level or change from Flow triggering to Pressure triggering. Ensure the Patient Type is set correctly.
TV, compliance and resistance values are inaccurate.	The Checkout was not done with the current patient circuit.	Complete the Checkout with the same breathing circuit that will be used on the patient.
The Checkout fails.	Water trap on the exhalation valve is not on tightly.	Ensure the water trap is screwed on tightly.
	Patient circuit not connected to the ventilator.	Attach patient circuit to inspiratory and expiratory ports.
	Patient wye is not properly occluded.	Ensure the patient wye is occluded completely with the leak test plug.
	Expiratory flow sensor has failed.	Clean or replace the flow sensor. Ensure flow sensor is properly connected.
	Exhalation valve and seals are not properly seated.	Remove exhalation valve and replace.
	A connection port on the patient circuit is open.	Ensure all connection ports are occluded.
	Leak in patient circuit is very large.	Check the breathing circuit for leaks.

7 Cleaning and Maintenance

In this section

System status 7-2
Repair policy 7-2
Maintenance summary and schedule 7-3
Clean and sterilize 7-5

System status

To view the System Status menu, push **System Setup** and select ***System Status***. The ***System Status*** menu provides information on:

- O2 pressure.
- Air pressure.
- Internal battery status.
- System software revision number.
- Altitude.
- Hours the system has logged.
- Last airway module calibration.
- Airway module type.
- Airway module software revision number.

Important The last airway module calibration will not appear until the module is warmed up.

Repair policy

Do not use malfunctioning equipment. Make all necessary repairs or have the equipment serviced by an authorized Datex-Ohmeda service representative. After repair, test the equipment to ensure that it is functioning properly in accordance with the manufacturer's published specifications.

To help ensure full reliability, replacement and maintenance of those parts listed in this manual may be undertaken by a competent, trained individual having completed a Datex-Ohmeda service training program.

CAUTION No repair should ever be attempted by anyone not having experience in the repair of devices of this nature.

Replace damaged parts with components manufactured, sold, or recommended by Datex-Ohmeda. Then test the unit to ascertain that it complies with the manufacturer's published specifications.

Circuit diagrams, parts lists, and calibration instructions are available to properly trained individuals. Contact the local Datex-Ohmeda Field Service Representative for service assistance.

Maintenance summary and schedule

User maintenance

Minimum Frequency	Maintenance
During cleaning and setup	Inspect the parts for damage. Replace or repair as necessary.
As necessary	Empty the water trap on the exhalation valve housing. Empty the water trap on the air pipeline inlet fitting and replace the filter. Remove and clean the fan filters. Clean and replace the expiratory flow sensor. Clean and replace the neonatal flow sensor.
Monthly	Complete a Backlight Test*.
Every two months	Complete Gas Calibration*, if using an airway module.
Every six months	Complete calibrations for the O2 Flow Control Valve*, Air Flow Control Valve*, and the Exhalation Valve*.
Annually	Check performance of internal battery.

*See “Calibration menus” in Section 10 for more information.

Battery performance test

Internal batteries must undergo a discharge test annually.

1. Connect the EC to AC mains power for 8 hours to ensure the batteries are fully charged.
2. Connect a breathing circuit and test lung to the ventilator.
3. Set the following parameters:
   - Mode: BiLevel
   - Rate: 12/min
   - I:E: 1:2
   - Pinsp: 20 cmH_2O
   - PEEP: 5 cmH_2O
   - Bias Flow: 4 l/min
4. Start ventilation.
5. Unplug the power cord from AC mains.
6. If the batteries continue to power the ventilator for $\geq$ 60 minutes, the batteries have sufficient charge. If the batteries do not power the ventilator for $\geq$ 60 minutes contact a Datex-Ohmeda trained service representative to replace the batteries.
7. Connect the EC to AC mains power for 8 hours to ensure the batteries are fully charged before using.

Datex-Ohmeda approved service

This is the minimum level of maintenance recommended by Datex-Ohmeda. Local regulations may contain additional maintenance requirements. Datex-Ohmeda advocates compliance with local regulations which meet or exceed this minimum level of maintenance.

Circuit diagrams, parts lists and calibration instructions, which will assist qualified personnel to repair the equipment, are available.

Minimum Frequency	Maintenance
5000 hours or 12 months, whichever comes first	Have a Datex-Ohmeda trained service person complete the scheduled service maintenance checks, tests, calibrations and parts replacement as defined in the Technical Reference manual.

To determine the number of hours the system has run, select **System Setup** - ***System Status***.

EVair 03 compressor maintenance

Schedule preventive maintenance as defined in the Technical Reference manual, annually, or every 5000 pump hours, whichever occurs first.

The compressor pump will need to be replaced approximately every 10,000 hours. Check the timer on the compressor control panel. Call service representative when time is nearing 10,000 hours.

CAUTION Compressor weighs approximately 40 kg (88 lb), do not remove from the ventilator cart without proper service tools.

Airway module preventive maintenance

Minimum frequency	Maintenance
Daily	Replace the D-fend.
Every two months	Complete Gas Calibration*.
Annually	Schedule annual maintenance check.

*refer to “Calibration menus” in section 10 for more information.

Clean and sterilize

Datex-Ohmeda recommends cleaning and sterilizing between patients. Consult your hospital guidelines for specific cleaning and sterilizing guidelines.

CAUTION Do not use abrasives, sharp tools, or any methods that may damage the surface of the parts.

Cleaning

Use a damp cloth with mild detergent to clean all external surfaces.

For parts that may be removed and submersed:

1. Wash and soak parts in mild detergent and warm tap water for a minimum of 15 minutes.
2. Rinse thoroughly in cold water followed by hot water.
3. Dry in room air, allowing cavities to drain.

Sterilization

Autoclave

1. Wash parts to clean, following the *Cleaning* procedure.
2. Autoclave at 134°C and cool to room temperature.

Other cleaning and sterilizing agents

Use the table to select the appropriate cleaning agent for parts.

WARNING The following cleaning/disinfection agents have been validated for material compatibility only. The effectiveness of sterilization with these agents has not been validated.

	Ethyl Alcohol	Sporox II	Cidex	NU-CIDEX	CIDEX OPA	Autoclave at 134°C	Mild detergent and warm water
Expiratory flow sensor	yes	yes	no	no	no	yes	yes
Exhalation valve housing and parts	yes	yes	no	no	no	yes	yes
Fan filters	no	no	no	no	no	no	yes
Aeroneb Pro Nebulizer	no	no	yes	yes	yes	yes	yes
Water trap (cart mounted)	yes	yes	no	no	no	yes	yes
Cables	yes	no	no	no	no	no	yes
External surfaces	no	no	no	no	no	no	yes
Neo Flow Sensor	yes	yes	no	no	no	yes	yes

Expiratory flow sensor

The expiratory flow sensor may be removed while the ventilator is operating while continuing patient ventilation. However, without the sensor, the ventilator will rely on internal calibrations which may reduce the accuracy of delivery.

If removed, the ventilator will alarm, volume and flow measurements will not be displayed, and flow triggering will not be available until the sensor is replaced.

CAUTION Do not use compressed air or water jet to clean the sensor.

1. Remove the flow sensor by pulling it away from the ventilator

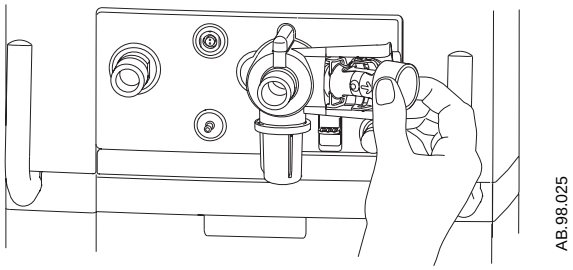

2. Rinse the sensor immediately after removal.
3. Clean or sterilize flow sensor by using one of the recommended procedures.
4. Check for cracks or damage, and replace if any defects are visible.
5. Replace flow sensor when dry. Flow sensor will click when it is properly replaced.
6. Complete a system Checkout prior to use on the next patient.

Exhalation valve housing

1. Turn the ventilator off.
2. Remove the exhalation valve assembly from the ventilator by pressing down on the latch and pulling the assembly away from the ventilator.

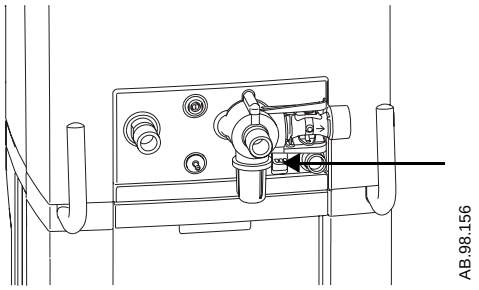

3. Remove the expiratory flow sensor from the exhalation valve assembly and set aside or clean.
4. Unscrew the water trap and empty.
5. Disassemble the diaphragm from the housing.
6. Clean or sterilize exhalation valve housing by using one of the recommended procedures.
7. Check for cracks or damage, and replace if any defects are visible.
8. Reassemble the water trap and diaphragm on the exhalation valve housing.

Note Ensure the water trap o-ring is present when reassembling the water trap.

9. Reassemble the dry exhalation valve housing and expiratory flow sensor.
10. Install the exhalation valve assembly onto the ventilator.
11. Complete a system Checkout prior to use on a patient.

Fan filters

Clean both the display and ventilator fan filters as follows.

Note Do not autoclave the filters.

1. Remove the display fan filter by sliding the filter holder down from the display housing.

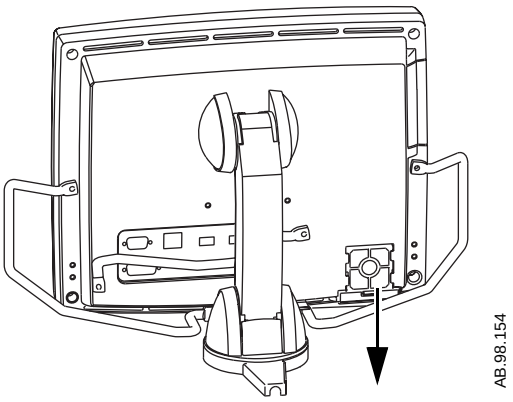

2. Remove the ventilator unit fan filter by inserting a thin blade tool into the groove and prying the filter cover off of the back of the system. Do not remove the screws holding the fan filter in place.

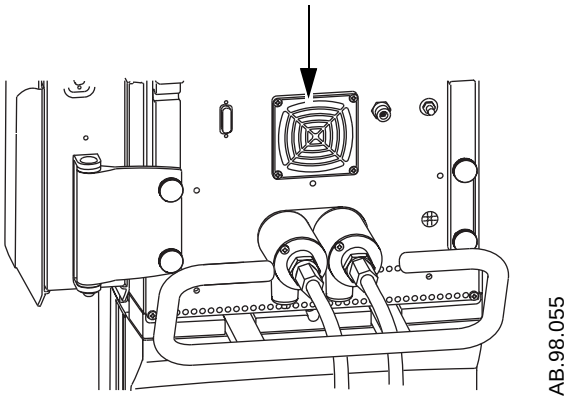

3. Rinse the filters with clean water.
4. Allow the filters to dry.
5. Reinsert the filters.

Note Reinsert the ventilator unit fan filter cover with the smooth side facing out.

Aeroneb Pro nebulizer

Sterilize the nebulizer prior to the first use on a patient. Clean and sterilize the nebulizer between patients.

WARNING Do not use any other cleaning, disinfection, or sterilization methods other than those listed in this section.

CAUTION Do not use abrasive or sharp tools to clean the nebulizer unit.

Cleaning unit between uses for the same patient

1. Remove the nebulizer unit from the T-adapter and firmly insert a plug into the T-adapter.
2. Separate nebulizer and the cable.

CAUTION Do not autoclave or submerge the nebulizer cable.

3. Remove the filler cap from the nebulizer, and empty any excess liquid.
4. Rinse the parts with sterile water.
5. Shake excess water from the parts, and allow the parts to air dry.

Disinfecting unit between uses for the same patient

1. Remove the nebulizer unit from the T-adapter and firmly insert a plug into the T-adapter.
2. Separate nebulizer and the cable.

CAUTION Do not autoclave or submerge the nebulizer cable.

3. Remove the filler cap from the nebulizer and empty any excess liquid.
4. Disinfect using the method for CIDEX, NU-CIDEX, or CIDEX OPA.

CAUTION Refer to the product labeling for CIDEX, NU-CIDEX, and CIDEX OPA for specific instructions regarding activation, safe use, and disposal of these solutions. Disinfection should not be used as an alternative to sterilization.

Sterilizing unit between patients

1. Remove the nebulizer and the adapters from the ventilator circuit.
2. Disassemble the nebulizer unit and adapters into individual components.

CAUTION Do not autoclave or submerge the nebulizer cable.

3. Remove the filler cap from the nebulizer and empty any excess liquid.
4. Clean all of the parts in warm water and a mild liquid detergent.
5. Rinse the parts thoroughly.
6. Shake the excess water from the parts, and allow the parts to air dry.
7. Check for cracks or damage, and replace any parts that show any visible defects.

CAUTION Do not reassemble parts prior to autoclaving.

8. Sterilize the components.
   - To steam sterilize, autoclave the wrapped parts using steam sterilization pre-vacuum cycle at 132°C to 135°C for 3 to 4 minutes with a drying cycle.
   - To sterilize with hydrogen peroxide gas plasma, place wrapped parts in a STERRAD 100S System and use the long cycle.

CAUTION Refer to the product labeling for STERRAD 100S System for specific instructions regarding proper operation. When the STERRAD method is used, high-level disinfection with CIDEX, NU-CIDEX or CIDEX OPA should not be carried out.

9. Check for cracks or damage, and replace any parts that show any visible defects.
10. Complete a functional test of the nebulizer.
    - Pour 1 to 5 ml of sterile water or normal saline into the nebulizer unit.
    - Connect the nebulizer to the ventilator using the nebulizer cable.
    - Select **Nebulizer** - ***Start***.
    - Verify that aerosol is visible.
    - Select **Nebulizer** - ***Stop***.
    - Disconnect the nebulizer from the ventilator and store properly.

Support arm

The support arm is not a sterile component and cannot be autoclaved or immersed in cleaning solution.

Use a damp cloth with mild detergent to clean the support arm.

Expiratory water trap

1. Disconnect the water trap from the patient circuit.
2. Disassemble the water trap and discard any liquid.
3. Clean or sterilize expiratory water trap by using one of the recommended procedures.
4. Check for cracks or damage, and replace if any defects are visible.
5. Assemble the water trap and patient circuit.
6. Complete a system Checkout prior to use on a patient.

EVair 03 compressor

Cleaning

Use a damp cloth with mild detergent to clean external surfaces.

Air inlet filter

Check the air inlet filter before each use, daily when in use, and clean or replace filter, as required.

1. Pull the air inlet filter out of the compressor housing.

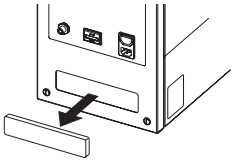

2. Rinse with water to clean. Allow to dry.

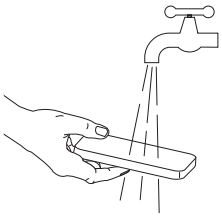

3. Slide a new or clean filter into the compressor housing.

Drain bottle

Empty the drain bottle when needed.

1. Unsnap the drain bottle from the top.
2. Empty the contents.

Note Dispose of contents according to local regulations.

3. Replace the drain bottle.

Airway module components

Airway adapter

Replace the single-use adapter after each patient.

A reusable adapter can be disinfected with glutaraldehyde or alcohol. A reusable steel adapter may be autoclaved.

To clean the adapter before use, submerge the adapter in 70% alcohol solution for 30 seconds and rinse carefully with water. Ensure all traces of alcohol or detergent are rinsed away or dried before connecting to the patient.

Sampling line

Do not reuse the sampling line. Reusing a cleaned sampling line may affect measurement results.

D-fend water trap

The water trap container can be cleaned with disinfecting solutions or sterilized using cold chemicals or ethylene oxide.

CAUTION Do not disinfect or open the water trap cartridge. Do not touch the water trap membrane. The hydrophobic membrane is damaged if any cleaning is attempted other than rinsing with water.

To lengthen the lifetime of your module and to minimize downtime:

- Empty the water trap container whenever it is more than half full.
- Do not open, wash, or sterilize the water trap cartridge.
- After washing or disinfecting the airway adapter or water trap container, make sure there is no alcohol nor detergent left when used again. Traces of alcohol or other organic cleaning solutions may affect measurement.
- Do not force air or oxygen through the water trap.
- Do not allow smoke and dust to enter the water trap.

If a message ‘Sample line blocked’ appears:

- Replace the sampling line.
- Empty the water trap container.

8 Theory of Operation

In this section

Ventilation theory 8-2
Ventilating in Backup mode 8-2
Modes 8-3
Electrical operation 8-22
Pneumatic operation 8-25

Ventilation theory

The system delivers controlled volume or pressure breath profiles in response to clinician inputs. The ventilator is time cycled for controlled breaths and flow cycled with a time cycle override, for spontaneous breaths. The system will trigger on both pressure and flow, and will respond to a positive inspiratory trigger condition within eight ms. The system uses proportional flow control valves and an active exhalation valve in order to provide ventilation delivery.

A controllable bias flow is maintained during ventilation delivery for use in detecting and responding to the spontaneous breath activity of the patient. The system incorporates monitoring of airway pressure, FiO_2, and exhaled volume monitoring that is independent of the ventilation delivery system. The system also includes an integrated nebulizer system employing electronic micropump technology for delivery of inhaled drugs.

The system is a software controlled microprocessor based product that receives clinical control inputs and displays information via a graphical user interface display unit. The display unit communicates in real time with two other system microprocessors that control ventilation delivery and safety related ventilation monitoring. The display unit also communicates with Datex-Ohmeda monitoring modules in order to acquire and display additional monitoring information such as CO_2 and O_2.

Ventilating in Backup mode

The system will function in a Backup mode. This mode is initiated if the system detects insufficient ventilation occurring in spontaneous breathing modes.

Backup ventilation uses the backup settings preset by the user. When the system is operating under backup ventilation, a general message will appear and settings may be changed.

A popup window appears when Backup mode occurs.

- Select ***Reset,*** to reset the system to the previous mode and exit Backup mode and return to the previous mode and settings.
- Select ***Adopt,*** to exit Backup mode and retain the current Backup mode settings.

Modes

The system offers several different modes of ventilation. The functionality, the Vent Setup menu selections, and a typical waveform for each vent mode are presented. The values displayed in the menus are the factory default settings and values. The facility or the user may change these values. See *"Ventilation operating specifications"* in Section 11 for information on the range of values for each ventilation control. See *"Ventilation settings"* in Section 4 for information on individual settings.

Setting families

The modes of ventilation have specific set parameters. The EC provides the user with the flexibility to specify certain parameters that are aligned with the user's past experience. These include flow and timing parameters.

Five setting families are available. The timing settings affect the inspiration time of the breath. Depending on the facility's configuration, timing can be set to I:E, Tinsp, or Tpause and flow control can be set to on or off. Tpause can only be selected when the flow is set to on. See *"Installation Mode,"* in Section 10 for more information about the ***Ventilator Settings*** menu.

The timing and flow selections in the ***Ventilator Settings*** menu will determine which of these settings are available in the VCV, PCV, PCV-VG, and SIMV-VC modes. The table shows the setting families. All modes shown in the table require a respiratory rate setting. VCV, PCV-VG, and SIMV-VC modes also require a tidal volume setting.

For example: if timing is set to I:E and flow is set to Off, setting family 2 is active. When in VCV mode, available settings that control the timing and flow are I:E and Insp Pause.

	Family 1	**Family 2**	**Family 3**	**Family 4**	**Family 5**
Timing	I:E	I:E	Tinsp	Tinsp	Tpause
Flow Control	On	Off	On	Off	On
VCV	I:E Flow	I:E Insp Pause	Tinsp Flow	Tinsp Insp Pause	Tpause Flow
PCV	I:E	I:E	Tinsp	Tinsp	Tinsp
PCV-VG	I:E	I:E	Tinsp	Tinsp	Tinsp
SIMV-VC	Tinsp Flow	Tinsp Insp Pause	Tinsp Flow	Tinsp Insp Pause	Tpause Flow

Volume controlled ventilation (VCV)

In VCV, a set amount of volume is delivered during each mandatory breath. The volume is delivered using a constant flow over a specified amount of time. The amount of pressure required to deliver the tidal volume will vary according to the compliance and resistance of the patient's lungs and thorax.

In VCV, the gas flow to the patient is kept constant during inspiration as long as the airway pressure is below the Plimit setting. Once the Plimit setting has been reached, the flow is reduced to maintain the Plimit level. During the expiratory phase, spontaneous breaths can be drawn from the set PEEP level.

Assist control is available in VCV, PCV, and PCV-VG modes. Activate assist control through the ***Vent Preferences*** menu.

- Set to ***On*** to deliver a controlled breath during the expiratory phase when a patient trigger is detected.
- Set to ***Off*** to support spontaneous patient breathing at the PEEP pressure level during the expiratory phase.

VCV			
Exit		Bias Flow	3
FiO2	50	Insp Pause*	0
TV	500	Rise Time	100
Rate	10		
I:E*	1:2		
PEEP	Off		
Plimit	20		
Pmax	30		
Trigger	2		
-more-			

* This setting is dependent on the ***Timing*** and ***Flow*** selections made in the ***Ventilator Settings*** menu.

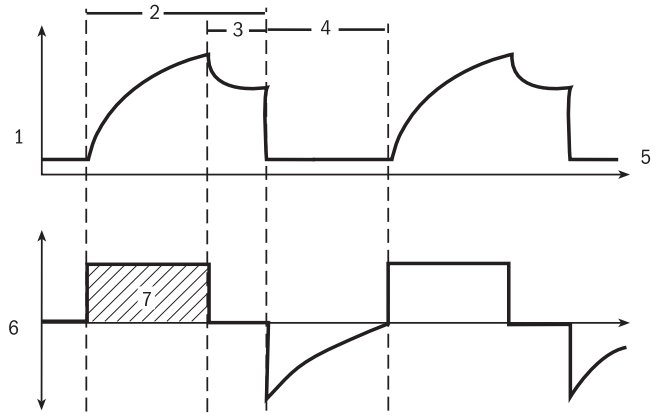

1. Paw waveform
2. Tinsp
3. Insp Pause
4. Texp
5. PEEP
6. Flow waveform
7. TV

Figure 8-1 • VCV waveforms

Pressure controlled ventilation (PCV)

In PCV, a set pressure level is delivered during each mandatory breath. The pressure is delivered using a decelerating flow and the breath is held for a set amount of time. The amount of volume provided will vary according to the compliance of the patient's lungs.

During the inspiratory phase, spontaneous breaths can be drawn from the set inspired pressure level. During the expiratory phase, spontaneous breaths can be drawn from the set PEEP level.

Assist control is available in VCV, PCV, and PCV-VG modes. Activate assist control through the ***Vent Preferences*** menu.

- Set to ***On*** to deliver a controlled breath during the expiratory phase when a patient trigger is detected.
- Set to ***Off*** to support spontaneous patient breathing at the PEEP pressure level during the expiratory phase.

PCV	
Exit	
FiO2	50
Pinsp	10
Rate	10
I:E*	1:2
PEEP	Off
Pmax	30
Trigger	2
Bias Flow	3
Rise Time	100

* This setting is dependent on the ***Timing*** and ***Flow*** selections made in the ***Ventilator Settings*** menu.

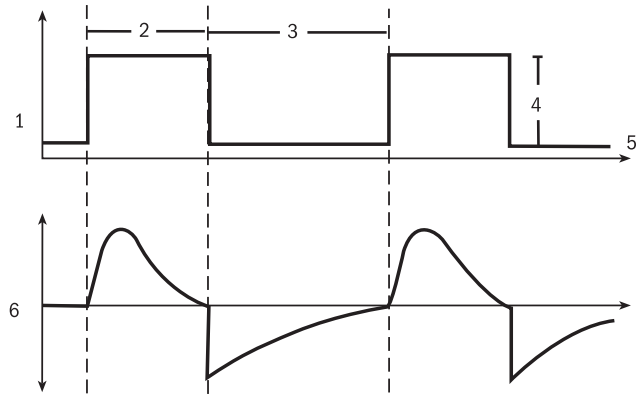

1. Paw waveform
2. Tinsp
3. Texp
4. Pinsp
5. PEEP
6. Flow waveform

Figure 8-2 • PCV waveforms

Pressure controlled ventilation - volume guaranteed (PCV-VG)

In PCV-VG, a tidal volume is set and the ventilator delivers that volume using a decelerating flow and a constant pressure. The ventilator will adjust the inspiratory pressure needed to deliver the set tidal volume breath-by-breath so that the lowest pressure is used. The pressure range that the ventilator will use is between the PEEP + 2 cmH_2O level on the low end and 5 cmH_2O below Pmax on the high end. The inspiratory pressure change between breaths is a maximum of ±3 cmH_2O. If a high airway pressure alarm is active due to the current breath, the next breath's pressure target will be 0.5 cmH_2O less than the current breath's pressure target.

This mode will deliver breaths with the efficiency of pressure controlled ventilation, yet still compensate for changes in the patient's lung characteristics. PCV-VG begins by first delivering a volume breath at the set tidal volume. The patient's compliance is determined from this volume breath and the inspiratory pressure level is then established for the next PCV-VG breath.

Assist control is available in VCV, PCV, and PCV-VG modes. Activate assist control through the ***Vent Preferences*** menu.

- Set to ***On*** to deliver a controlled breath during the expiratory phase when a patient trigger is detected.
- Set to ***Off*** to support spontaneous patient breathing at the PEEP pressure level during the expiratory phase.

PCV-VG	
Exit	
FiO2	50
TV	500
Rate	10
I:E*	1:2
PEEP	Off
Pmax	30
Trigger	2
Bias Flow	3
Rise Time	100

* This setting is dependent on the ***Timing*** and ***Flow*** selections made in the ***Ventilator Settings*** menu.

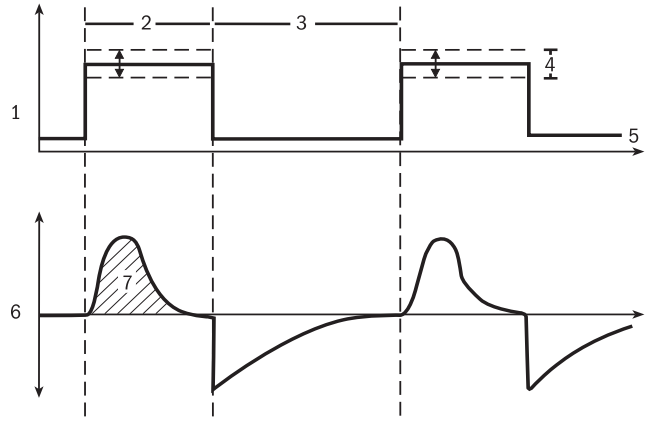

1. Paw waveform
2. Tinsp
3. Texp
4. Variable pressure to deliver desired TV
5. PEEP
6. Flow waveform
7. TV

Figure 8-3 • PCV-VG waveforms

Synchronized intermittent mandatory ventilation - volume controlled (SIMV-VC)

In SIMV-VC, a set number of volume control breaths are delivered to the patient each minute. Between mandatory breaths, the patient can breathe spontaneously at whatever rate, volume, and timing they desire. Pressure support can be used to support the spontaneous breaths.

A portion of the exhalation phase is defined as the trigger window. If a spontaneous breath is detected in this window, a new volume controlled breath is initiated. If a spontaneous breath is detected outside of this window, support for this breath is provided according to the set pressure support. The remainder of the trigger window is added to the next non-triggered phase.

The inspiratory phase of supported breaths will end if the set End Flow is reached, if the airway pressure exceeds (PEEP + Psupp + 2.5 cmH_2O), or if the max Tinsp is reached. Supported breaths have a maximum inspiratory time of 4 seconds for adults, 1.5 seconds for pediatrics, and 0.8 seconds for neonates.

Ventilation modes to which backup ventilation apply are established by facility defaults. See *"Installation Mode,"* section 10.

If selected to be active in SIMV-VC, backup ventilation will be initiated if the Apnea alarm is triggered or if the patient's minute ventilation decreases to below 50% of the set low MVexp alarm. Backup settings may be changed for each patient.

SIMV-VC			
Exit		Trigger	2
FiO2	50	Trig Window	25
TV	500	Bias Flow	3
Rate	10	Insp Pause*	0
Tinsp*	2.0	Rise Time	100
PEEP	Off	PSV Rise Time	0
Psupp	5	End Flow	25
Plimit	20		
Pmax	30		
-More-			

* This setting is dependent on the ***Timing*** and ***Flow*** selections made in the ***Ventilator Settings*** menu.

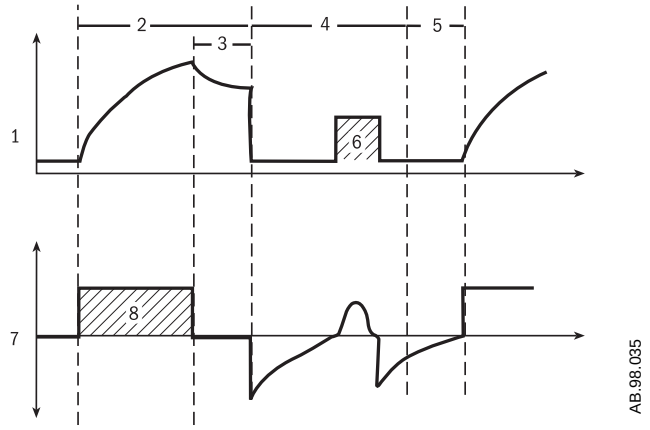

1. Paw waveform
2. Tinsp
3. Insp Pause
4. Spontaneous breathing period
5. Trig Window
6. Pressure supported breath
7. Flow waveform
8. TV

Figure 8-4 • SIMV-VC waveforms

Synchronized intermittent mandatory ventilation - pressure controlled (SIMV-PC)

In SIMV-PC, a set number of pressure control breaths are delivered to the patient each minute. Between mandatory breaths, the patient can breathe spontaneously at whatever rate, volume, and timing they desire. Pressure support can be used to support the spontaneous breaths.

A portion of the exhalation phase is defined as the trigger window. If a spontaneous breath is detected in this window, a new pressure controlled breath is initiated. If a spontaneous breath is detected outside of this window, support for this breath is provided according to the set pressure support. The remainder of the trigger window is added to the next non-triggered phase.

The inspiratory phase of supported breaths will end if the set End Flow is reached, if the airway pressure exceeds (PEEP + Psupp + 2.5 cmH_2O), or if the max Tinsp is reached. Supported breaths have a maximum inspiratory time of 4 seconds for adults, 1.5 seconds for pediatrics, and 0.8 seconds for neonates.

Ventilation modes to which backup ventilation apply are established by facility defaults. See *"Installation Mode,"* section 10.

If selected to be active in SIMV-PC, backup ventilation will be initiated if the Apnea alarm is triggered or if the patient's minute ventilation decreases to below 50% of the set low MVexp alarm. Backup settings may be changed for each patient.

SIMV-PC			
Exit		Trig Window	25
FiO2	50	Bias Flow	3
Pinsp	10	End Flow	25
Rate	10	Rise Time	100
Tinsp	2.0	PSV Rise Time	0
PEEP	Off		
Psupp	5		
Pmax	30		
Trigger	2		
-More-			

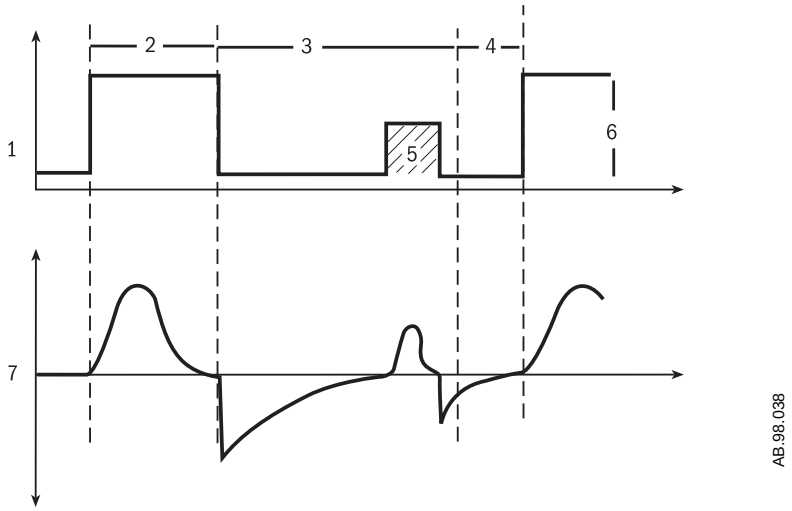

1. Paw waveform
2. Tinsp
3. Spontaneous breathing period
4. Trig Window
5. Pressure supported breath
6. Pinsp
7. Flow waveform

Figure 8-5 • SIMV-PC waveforms

BiLevel airway pressure ventilation (BiLevel)

In BiLevel, the ventilator switches between two pressure levels at set times. The patient can breathe spontaneously while at either of the pressure levels.

The ventilator synchronizes spontaneous breathing with changes in pressure level. The system has a set trigger window of 80% or 4 seconds whichever is less. If a spontaneous breath is detected within this window, the breath is delivered by an increase to Phigh. If a spontaneous breath is detected outside the window, a PSV breath is delivered.

If the patient triggers a spontaneous breath just before the end of Thigh, the system will continue to deliver at Phigh (or Psupp if Psupp is more than Phigh) until the end flow is detected or PSV times out. Then, the system will transition to Plow.

The inspiratory phase of supported breaths will end if the set End Flow is reached, if the airway pressure exceeds (PEEP + Psupp + 2.5 cmH_2O), or if the max Tinsp is reached. Supported breaths have a maximum inspiratory time of 4 seconds for adults, 1.5 seconds for pediatrics, and 0.8 seconds for neonates.

Ventilation modes to which backup ventilation apply are established by facility defaults. See *"Installation Mode,"* section 10.

If selected to be active in BiLevel, backup ventilation will be initiated if the Apnea alarm is triggered or if the patient's minute ventilation decreases to below 50% of the set low MVexp alarm. Backup settings may be changed for each patient.

BiLevel			
Exit		PSV Rise Time	0
FiO2	50	Trigger	2
Phigh	10	Bias Flow	3
Plow	Off	End Flow	25
Thigh	1.7		
Tlow	4.25		
Psupp	5		
Pmax	30		
Rise Time	100		
-More-			

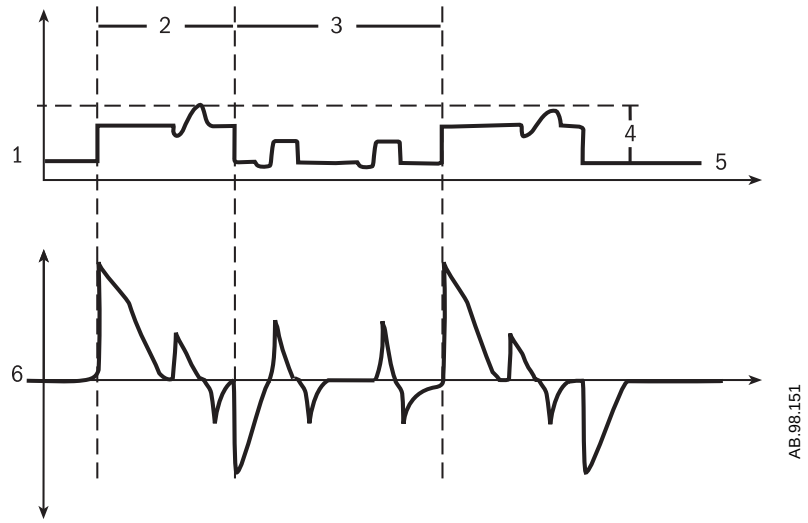

1. Paw waveform
2. High pressure period (Thigh)
3. Low pressure period (Tlow)
4. Phigh + Psupp
5. Plow
6. Flow waveform

Figure 8-6 • BiLevel waveforms

Continuous positive airway pressure/ pressure support ventilation (CPAP/PSV)

This mode offers the features from both CPAP and PSV modes. In CPAP, a pressure above ambient pressure is maintained on the patient's airway.

In PSV, the ventilator provides a set pressure level on top of the CPAP level during the inspiratory phase of the patient's breath. The patient determines their own rate, tidal volume, and inspiratory timing.

The inspiratory phase of supported breaths will end if the set End Flow is reached, if the airway pressure exceeds (PEEP + Psupp + 2.5 cmH_2O), or if the max Tinsp is reached. Supported breaths have a maximum inspiratory time of 4 seconds for adults, 1.5 seconds for pediatrics, and 0.8 seconds for neonates.

Ventilation modes to which backup ventilation apply are established by facility defaults. See *"Installation Mode,"* section 10.

If selected to be active in CPAP/PSV, backup ventilation will be initiated if the Apnea alarm is triggered or if the patient's minute ventilation decreases to below 50% of the set low MVexp alarm. Backup settings may be changed for each patient.

CPAP/PSV	
Exit	
FiO2	50
PEEP	Off
Psupp	5
Pmax	30
End Flow	25
PSV Rise Time	0
Trigger	2
Bias Flow	3

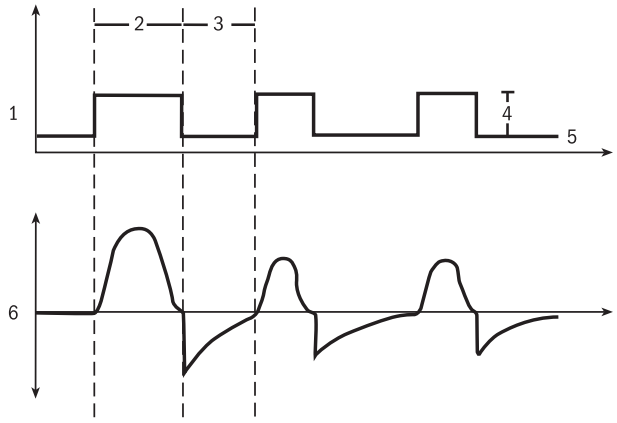

1. Paw waveform
2. Tinsp
3. Texp
4. Psupp
5. PEEP
6. Flow waveform

Figure 8-7 • CPAP/PSV waveforms

Synchronized intermittent mandatory ventilation - pressure controlled volume guaranteed (SIMV-PCVG)

This is an optional mode on the Engström Carestation.

In SIMV-PCVG, a set number of pressure control breaths with a guaranteed volume are delivered to the patient each minute. Between mandatory breaths, the patient can breathe spontaneously at whatever rate, volume, and timing they desire. Pressure support can be used to support the spontaneous breaths.

The mandatory breaths will deliver the set tidal volume using a decelerating flow and a constant pressure. The ventilator will adjust the inspiratory pressure needed to deliver the set tidal volume breath-by-breath so that the lowest pressure is used. The pressure range that the ventilator will use is between the PEEP + 2 cmH2O level on the low end and 5 cmH2O below Pmax on the high end. The inspiratory pressure change between breaths is a maximum of +/- 3 cmH2O. If a high airway pressure alarm is active due to the current breath, the next breath's pressure target will be 0.5 cmH_2O less than the current breath's pressure target.

In SIMV-PCVG the first mandatory breath delivered is a volume breath at the set tidal volume. The patient's compliance is determined from this volume breath and the inspiratory pressure level is then established for the next mandatory breath. The remaining mandatory breaths will be pressure controlled with a guaranteed volume.

A portion of the exhalation phase is defined as the trigger window. If a spontaneous breath is detected in this window, a new mandatory PCVG breath is initiated. If a spontaneous breath is detected outside of this window, support for this breath is provided according to the set pressure support. The remainder of the trigger window is added to the next non-triggering phase.

The inspiratory phase of supported breaths will end if the set End Flow is reached, if the airway pressure exceeds (PEEP + Psupp + 2.5 cmH_2O), or if the max Tinsp is reached. Supported breaths have a maximum inspiratory time of 4 seconds for adults, 1.5 seconds for pediatrics, and 0.8 seconds for neonates.

If selected to be active in SIMV-PCVG, backup ventilation will be initiated if the apnea alarm is triggered or if the patient's minute ventilation decreases below 50% of the set low MVexp alarm limit. Backup settings may be changed for each patient.

SIMV-PCVG			
Exit		Trig Window	25
FiO2	50	Bias Flow	3
TV	500	Rise Time	100
Rate	10	PSV Rise Time	0
Tinsp	2.0	End Flow	25
PEEP	Off		
Psupp	5		
Pmax	30		
Trigger	2		
-More-			

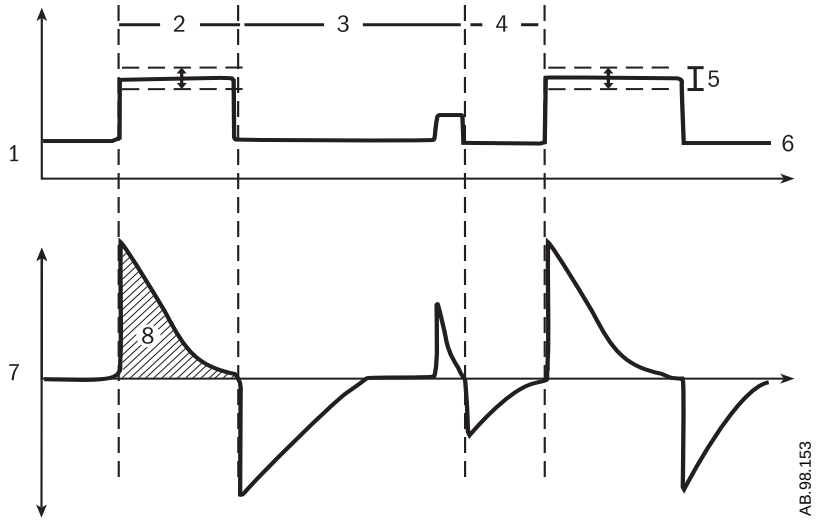

1. Paw waveform
2. Tinsp
3. Spontaneous breathing period
4. Trig Window
5. Variable pressure to deliver desired TV
6. PEEP
7. Flow waveform
8. TV

Figure 8-8 • SIMV-PCVG waveforms

BiLevel airway pressure ventilation - volume guaranteed (BiLevel-VG)

This is an optional mode on the Engström Carestation.

BiLevel-VG combines the "open valve" technology of BiLevel with the benefits of volume guarantee. The base mode of BiLevel ventilation is united with the volume guarantee system of Pressure Controlled Volume Guaranteed that ensures the set tidal volume is delivered during the high-pressure level. The volume guarantee automatically sets the inspiratory pressure to the lowest possible level to provide the set tidal volume. This inspiratory pressure level becomes the Phigh level of the BiLevel breath.

The volume guarantee is determined by the set tidal volume that results from the difference between the PEEP level and the inspiratory pressure level. The pressure range that the ventilator will use is between PEEP + 2 cmH_2O on the low end and 5 cmH_2O below Pmax on the high end. The inspiratory pressure change between breaths is a maximum of +/- 3 cmH_2O. If a high airway pressure alarm is active due to the current breath, the next breath's pressure target will be 0.5 cmH_2O less than the current breath's pressure target.

In BiLevel-VG the first mandatory breath delivered is a volume breath at the set tidal volume. The patient's compliance is determined from this volume breath and the inspiratory pressure is then established for the next mandatory breath. The remaining mandatory breaths will be BiLevel breaths where the inspiratory pressure level is set to ensure a guaranteed volume.

A portion of the exhalation phase is defined as the trigger window. If a spontaneous breath is detected in this window, a new mandatory BiLevel breath is initiated. If a spontaneous breath is detected outside of this window, support for this breath is provided according to the set pressure support level. The remainder of the trigger window is added to the next non-triggering phase.

The inspiratory phase of supported breaths will end if the set End Flow is reached, if the airway pressure exceeds (PEEP + Psupp + 2.5 cmH_2O), or if the max Tinsp is reached. Supported breaths have a maximum inspiratory time of 4 seconds for adults, 1.5 seconds for pediatrics, and 0.8 seconds for neonates.

If selected to be active in BiLevel-VG, backup ventilation will be initiated if the apnea alarm is triggered or if the patient's minute ventilation decreases below 50% of the set low MVexp alarm limit. Backup settings may be changed for each patient.

BiLevel-VG			
Exit		Trig Window	25
FiO2	50	Bias Flow	3
TV	500	Rise Time	100
Rate	10	PSV Rise Time	0
Tinsp	2.0	End Flow	25
PEEP	Off		
Psupp	5		
Pmax	30		
Trigger	2		
-More-			

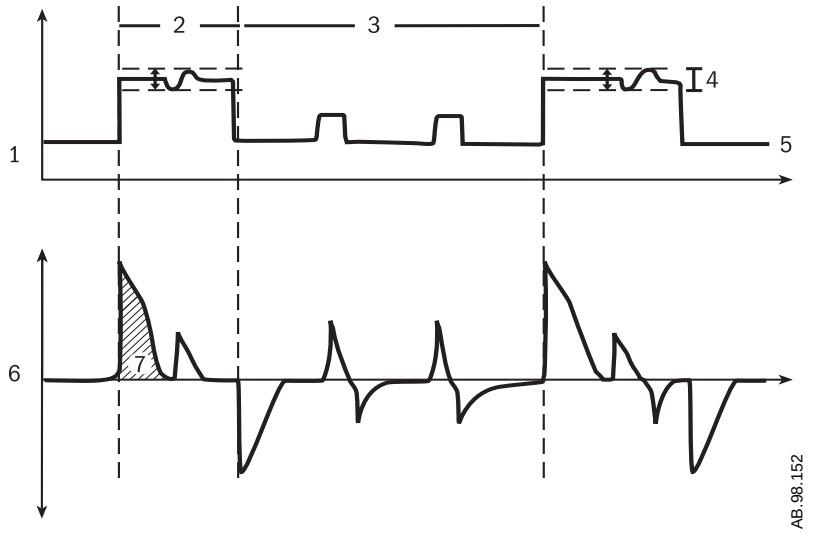

1. Paw waveform
2. Tinsp
3. Spontaneous breathing period
4. Variable pressure to deliver desired TV
5. PEEP
6. Flow waveform
7. TV

Figure 8-9 • BiLevel-VG waveforms

Electrical operation

The system contains four major processor control boards: the Display Unit (DU), the Ventilator Control Board (VCB), the Ventilation Monitoring Board (VMB), and the Power Management Board (PMB). Two other analog boards, the motherboard and the Monitoring Module Power Supply Board, complete the electronic architecture.

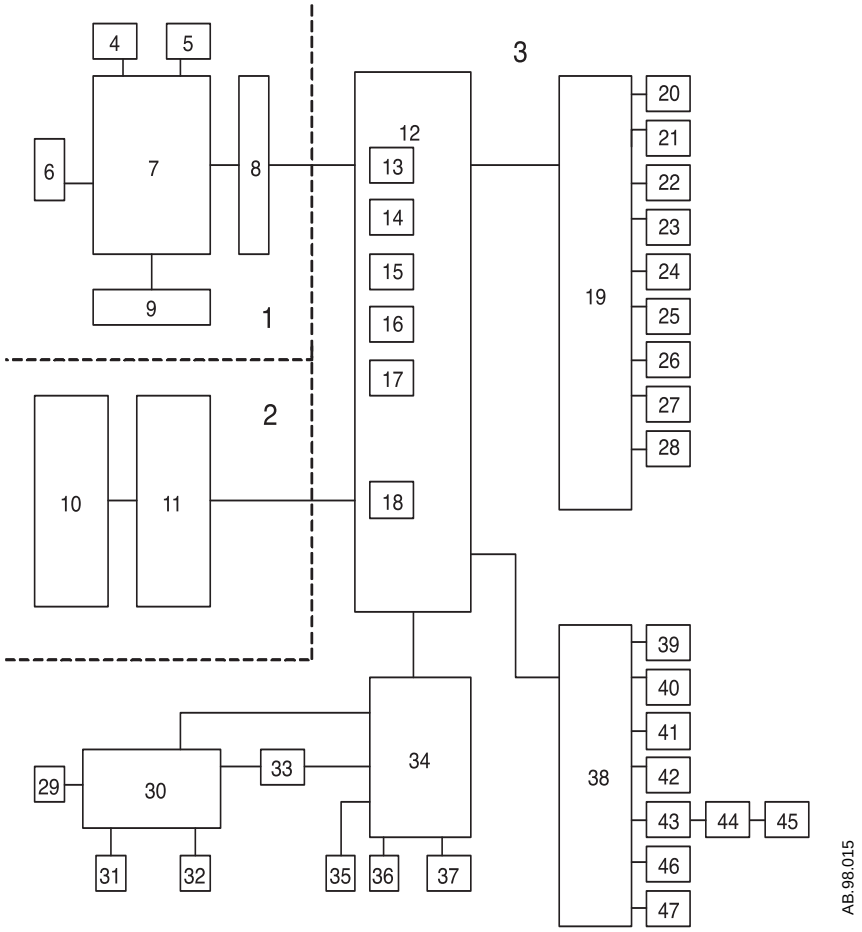

1. Display compartment
2. Monitoring module compartment
3. Ventilator chassis
4. LCD display
5. ComWheel
6. Speaker
7. Display unit CPU
8. Display unit interface board
9. Display unit communication board
10. Module bays
11. Module interface board
12. Motherboard
13. Display unit port
14. External serial input/output port
15. RS-422 port
16. RS-485 port
17. Module bus port
18. Patient side monitor port
19. Ventilator control board (VCB)
20. Electronic micropump nebulizer board
21. Air flow valve
22. O_2 flow valve
23. Exhalation valve
24. Air flow and temperature sensor
25. O_2 flow and temperature sensor
26. Total flow and temperature sensor
27. Inspiratory pressure sensor and valve
28. Auxiliary pressure sensor and valve
29. External battery
30. Power panel connectors
31. System switch
32. AC power cord
33. Mains power supply
34. Power management board (PMB)
35. Ventilator engine fan
36. Power module fan
37. Internal batteries
38. Ventilation monitoring board (VMB)
39. Inspiratory effort valve
40. Relief valve
41. High air pressure sensor
42. High O_2 pressure sensor
43. Expiratory flow sensor board
44. Expiratory flow interface board
45. Expiratory flow sensor
46. O_2 concentration sensor
47. Expiratory pressure sensor and valve

Figure 8-10 • Electrical block diagram

Display Unit (DU)

The DU contains a CPU board and two daughter boards. The CPU board provides power and signals for operating the main audio speaker and the display. One daughter board, the DU connector board, provides an interface between the DU's CPU and the remainder of the system. The second daughter board provides hardware connector interfaces for the Ethernet, USB and Network ID ports.

The DU communicates with the remainder of the system via the motherboard using five digital channels. Setting and alarm annunciation information are directly relayed to the VMB and VCB from the DU. The display is a 31 cm active matrix LCD with 6 bits per color.

In the event of a display unit communications failure, the system will continue to ventilate at the current settings.

Ventilator Control Board (VCB)

The VCB collects information from all of the system sensors and controls all the actuators necessary to effect ventilation delivery. The VCB subsequently computes and supplies all ventilation sensor monitoring data for the display on the DU. If there are alarms to be generated based on this monitoring data, the VCB notifies the DU to post the appropriate alarm message and audio sequence and observes the DU's response to ensure that the alarm was adequately presented.

The VCB also communicates with the VMB every one ms, receiving expiratory flow, expiratory pressure, and O_2 sensor data. The VCB contains actuator drive circuits for the air and oxygen inspiratory valves and the expiratory valve. The VCB also contains digital control signals for activating the inspiratory effort and relief valves.

Ventilation Monitoring Board (VMB)

The VMB performs as an independent monitoring system that provides computational and oversight redundancy to the DU and VCB. The VMB acquires sensor data relating to the expiratory airway pressure, delivered O_2 percentage, and exhaled minute and tidal volumes. It also monitors the air and oxygen supply pressures.

A safety valve actuator is also controlled by the VMB. This allows for a unilateral release of pressure in the breathing circuit.

The VMB communicates directly with the DU. A separate link transmits sensor data to the VCB.

Power Management Board (PMB)

The PMB determines the source of power and controls the charging operation of the internal battery.

The PMB directly communicates with the DU concerning the charge status of the internal battery as well as the unit shutdown sequence.

Motherboard

The motherboard provides connectivity for the VCB, VMB, and PMB assemblies. Analog circuits on the board limit the current for external peripheral connections to ensure that the primary ventilation and monitoring functions are not compromised by excessive power draw.

Monitoring Module Power Supply Board

External monitoring module bays support the use of Datex-Ohmeda M-series modules. This board is located within the housing of the module bay and regulates power to usable levels.

Pneumatic operation

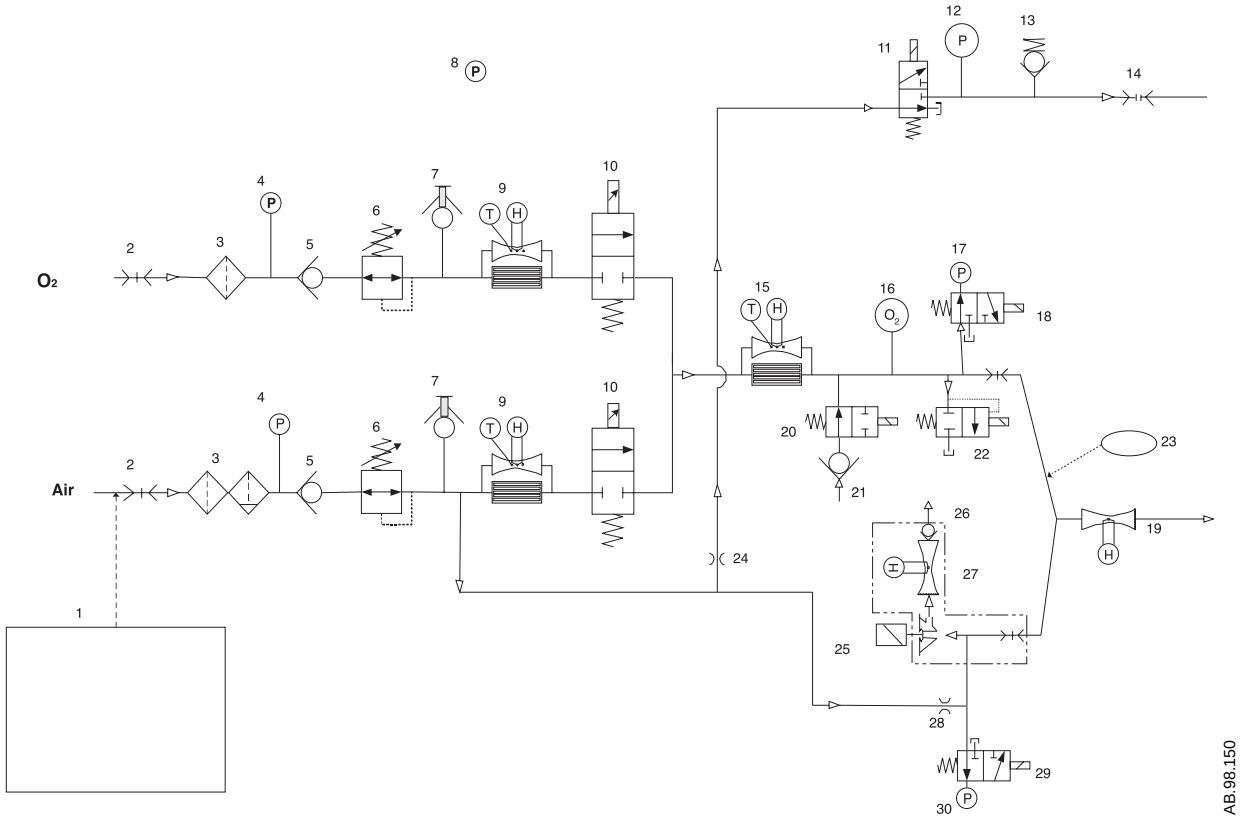

1. Compressor
2. Pipeline source
3. Filter
4. Supply pressure transducer
5. Check valve
6. Pressure regulator
7. Test port with plug
8. Absolute pressure
9. Inspiratory flow sensor
10. Inspiratory flow valve
11. Auxiliary pressure purge valve
12. Auxiliary pressure transducer
13. Relief valve
14. Auxiliary pressure port
15. Total flow sensor
16. Oxygen sensor
17. Inspiratory pressure transducer
18. Inspiratory pressure zeroing valve
19. Neonatal flow sensor (optional)
20. Inspiratory effort valve
21. Free breathing check valve
22. Relief valve
23. Nebulizer
24. Purge flow resistor
25. Exhalation valve actuator
26. Check valve
27. Expiratory flow sensor
28. Purge flow resistor
29. Expiratory pressure zeroing valve
30. Expiratory pressure transducer

Figure 8-11 • Pneumatic schematic

The supply of ventilator pneumatic power is drawn from compressed oxygen and air sources. Two separate inspiratory channels (air and O_2) are incorporated in the system in order to provide dynamic mixture control of the O_2 percentage. The air supply side may include an optional compressor unit for applications where compressed air is not available or compressed gases have been lost.

Inspiratory

Compressed gas enters the system through a coupling that is particular to the air or O_2 gas localization requirements. The gas is filtered as it enters the ventilator's pneumatic engine manifold. A supply pressure transducer is tapped at the exhaust of the filter to identify the adequacy of the supply pressure within the allowable range. Failures of supply gas, coupling hoses, or occluded filters, are identified using the supply pressure transducer.

Check valves prevent any backflow from the system that would possibly contaminate the supply gas lines. The pressure regulators ensure a constant pressure supply to the inspiratory flow valves. The inspiratory flow sensors are used during operation of the system to measure the volume of gas dispensed from the air and O_2 channels during inspiration. Adjustments as to the relative proportion of volume to dispense from each channel are made using this data in order to precisely control the percentage of O_2 being delivered to the patient.

Each inspiratory flow valve is capable of metering flows from approximately 0.05 l/min to 160 l/min. The valve is a proportional solenoid, normally closed type, that is powered by a current feedback loop.

The total flow sensor is used to measure the combined inspiratory flow being dispensed in the system. Using the known mixture composition, mass flow data from the sensor is converted to delivered volumetric flow towards the patient.

During normal operation, the inspiratory effort maneuver valve is open, allowing the free breathing check valve to admit flow if the patient draws a significant amount of inspiratory pressure. The free breathing valve allows the patient to spontaneously breathe in the event of a ventilation delivery failure. During an inspiratory effort procedure, the inspiratory effort maneuver valve closes, locking out the free breathing valve from the patient circuit.

The O_2 sensor operates using the paramagnetic principle of oxygen. The sensor is used to monitor the O_2 mixture being produced by the air and O_2 inspiratory channels. The displayed FiO_2 value is adjusted by a ratio of the barometric pressure and a 1.3 second moving average of the cyclic pressures obtained by the inspiratory pressure transducer. The sensor uses non-depleting technology.

The relief valve is capable of venting the inspiratory delivery side of the system at full flow rate. The valve is normally closed and would be powered open by either of the two control processors in the event that an overpressure condition is detected. The relief valve will also open mechanically at 110 cmH_2O. The inspiratory airway pressure transducer serves as one of the two airway pressure devices. All pressure transducers use silicon piezoresistive technology.

Expiratory

A solenoid powered exhalation valve controls exhaust from the breathing circuit. The solenoid is proportional in nature, allowing the valve to be used to actively adjust and control the exhalation sealing pressure.

The expiratory pressure transducer is continuously purged with clean, dry air in order to ensure that water plugs will not occlude the tap. This continuous flow of air is established off of the regulated air supply using a fixed purge flow pneumatic resistor. The expiratory pressure transducer uses silicon piezoresistive technology, and operates between -20 and 120 cmH_2O.

The expiratory flow transducer operates using hot wire anemometry principles whereby a wire having a large temperature to electrical resistance relationship, is placed in the stream of flow. At the output of the flow sensor is a flapper type check valve that prevents gas from being drawn in through the expiratory valve and minimizes patient rebreathing in the event of a ventilator failure.

The inspiratory flow sensors, total flow sensor and expiratory flow sensors use heat transfer technology and operate between 0 and 160 l/min.

Hazard protection

Potential software hazards are detected and prevented through the identification of unsafe patient conditions relative to O_2 concentration, airway pressure, apnea, and low minute volume.

Checks have been put in place for inspired O_2, airway pressure, apnea, and low minute volume alarms. Inspired O_2 is sensed by the air and oxygen flow sensors and verified by the paramagnetic O_2 sensor. Airway pressure is sensed and verified by the inspiratory and expiratory pressure sensors. Apnea and low minute volume are sensed by the expiratory flow sensor or neonatal flow sensor (optional) and verified by the air and oxygen flow sensors.

9 Parts

This section lists user-replaceable parts only. For other components, refer to the Technical Reference manual.

In this section

Exhalation valve assembly 9-2
AC power cords 9-3
System accessories 9-4
System parts 9-5
Airway module parts and accessories 9-6
EVair 03 compressor parts 9-6

Exhalation valve assembly

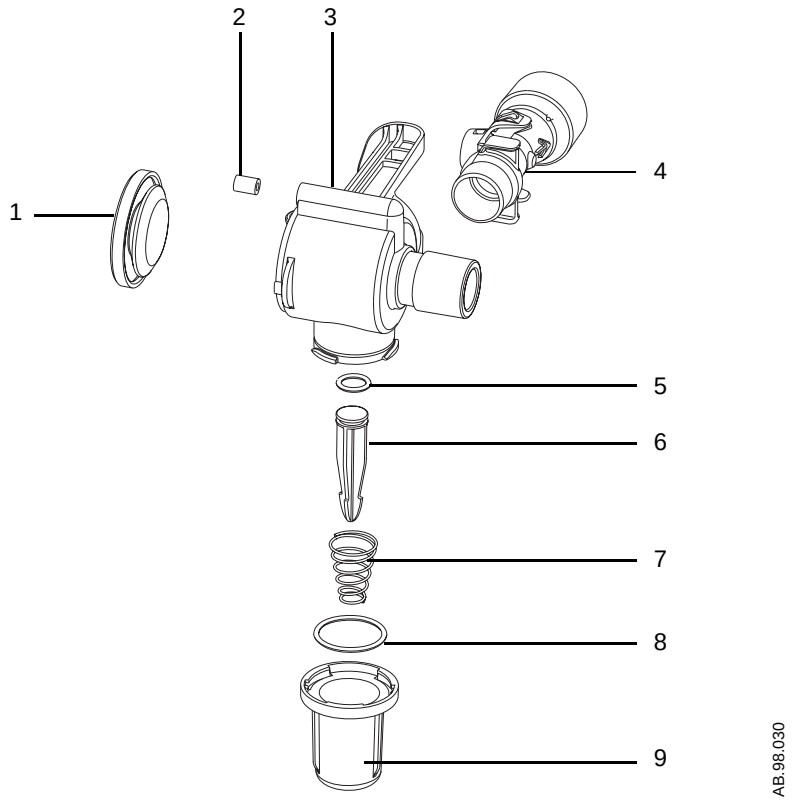

Item	Description	Stock Number
	Exhalation valve assembly (without flow transducer)	1505-8568-000
1	Diaphragm	1505-3224-000
2	Seal	1505-3223-000
3	Housing	1505-3222-000
4	Flow transducer (includes check valve and screen)	1505-3231-000
5	O-ring	1503-3056-000
6	Plunger	1505-3245-000
7	Spring	1505-3013-000
8	O-ring	1505-3009-000
9	Water trap	1505-3244-000

AC power cords

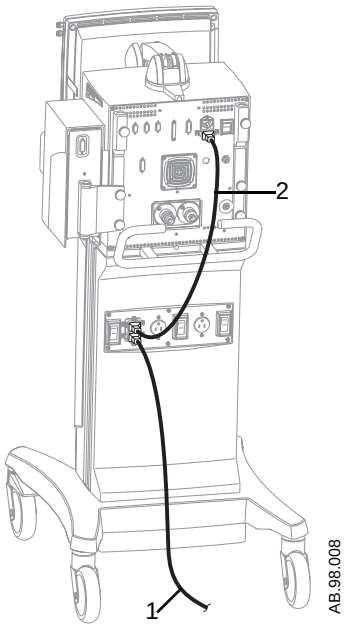

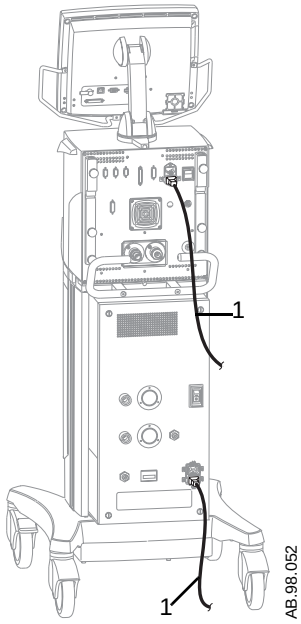

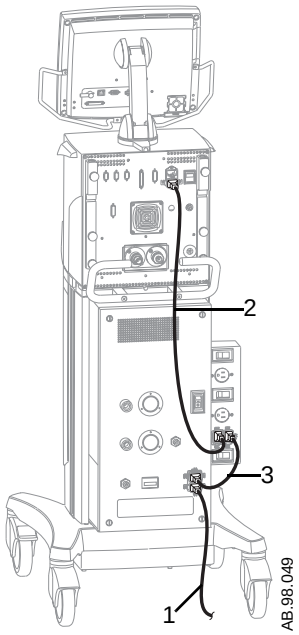

Item	Description	Stock Number
1	Power Cord	
	• AS 3112, 220-240 Vac	1500-3561-000
	• BS 1363, 220-240 Vac	1500-3283-000
	• BS 546, 220-240 Vac	1505-3817-000
	• CEE 7/7, 220 Vac	1500-3291-000
	• NEMA 5-15, 100-120 Vac	1505-3816-000
	• SEV 1011, 220-240 Vac	1500-3292-000
2	Power Cord Jumper, 1.0 meters	1505-3844-000
3	Power Cord Jumper, 0.5 meters	1505-3843-000

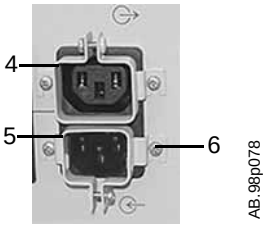

Item	Description	Stock Number
4	Retainer, Outlet Power Cord Jumper	1505-3041-000
5	Retainer, Inlet Power Cord	1505-3033-000
6	Screw, M3x8 PAN HD Sems	0140-6219-130

System accessories

Description	Stock Number
Breathing circuit arm	1505-3801-000
Breathing circuit, Adult (20)	M1012145
Breathing circuit, Pediatric (20)	M1012152
Expiratory water trap hose	M1010719
Expiratory water trap kit	M1003463
Gas cylinder holder	6600-0422-800
Intratracheal pressure catheter (10)	M1045564
Nebulizer cable	1505-5602-000
Nebulizer filler cap	AG-AP1030
Nebulizer head with filler cap*	AG-AP1000
Nebulizer T-adapter, adult (5)	AG-AP1010
Nebulizer T-adapter, pediatric (5)	AG-AP-1020
Nebulizer T-adapter, neonatal (5)	AG-AP-1025
Nebulizer, silicone plug	AG-AP1005

*Aerogen, Inc. recommends replacing the nebulizer head once a year.

System parts

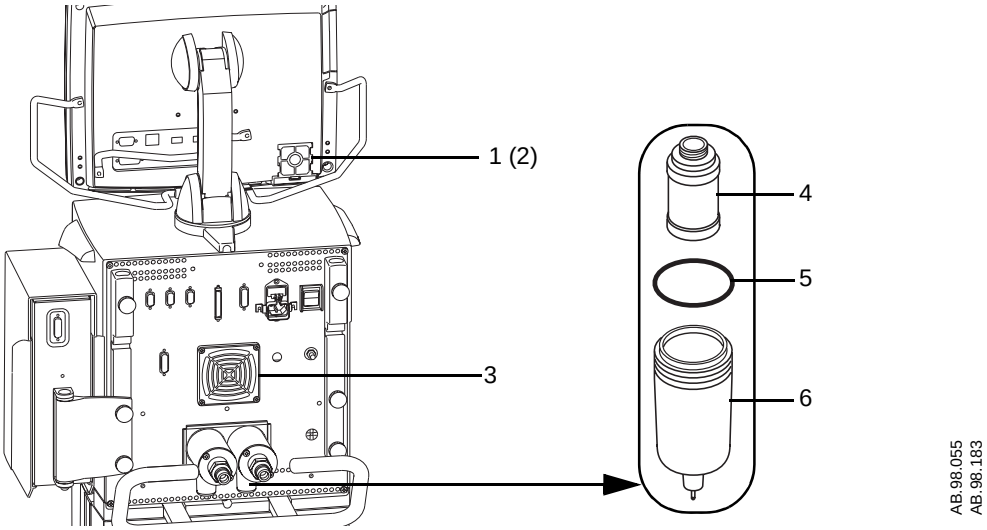

Item	Description	Stock Number
1	Display filter	897010
2	Display filter holder	896089
3	Fan filter, ventilator engine	1505-3029-000
4	Filter element	1505-3060-000
5	O ring, filter bowl	1503-3034-000
6	Filter bowl w/ o ring	1505-3062-000

Neonatal flow sensor

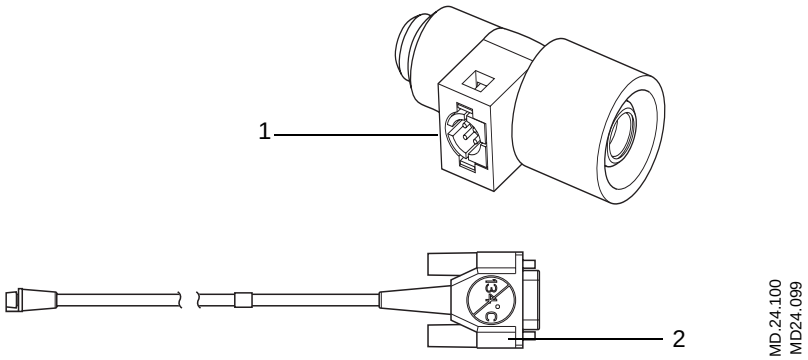

Item	Description	Stock Number
1	Neonatal flow sensor	1505-3272-000
2	Neonatal flow sensor cable	1505-5604-000

Airway module parts and accessories

Description	Stock Number
D-fend water trap container (5)	876107
D-fend+ water trap (10)	881319
Disposable CO_2 sampling line, 2m (10)	733162
Disposable D-lite sensor (50)	733950
Disposable D-lite+ sensor (50)	896952
Disposable Pedi-lite+ sensor (50)	8001948
Disposable straight t-adapter (10)	73385
Disposable straight t-adapter (100)	733856
Reusable D-lite sensor	733910
Reusable Pedi-lite sensor	73393
Spirometry tube, 2m (5)	890031

EVair 03 compressor parts

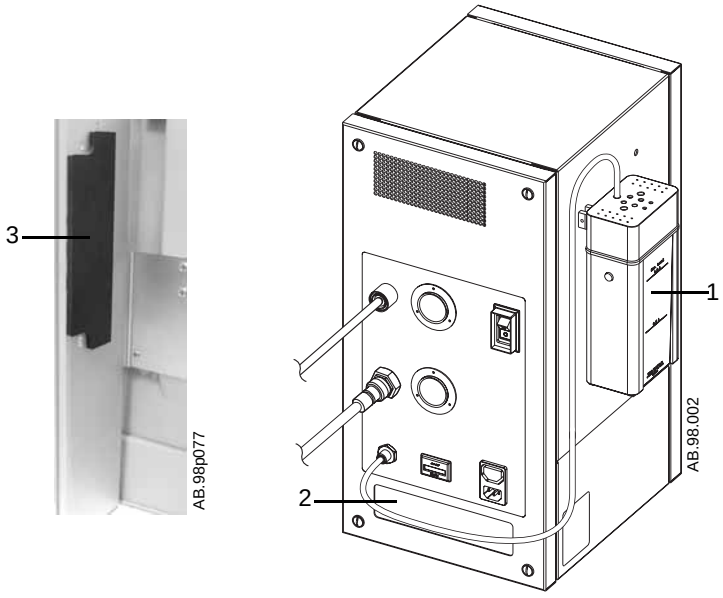

Item	Description	Stock Number
1	Drain Bottle Kit	5612316
2	Filter, air inlet	6985795
3	Foam, Vibration Damper	1505-3829

10 Installation Mode

In this section

Install/Service menu 10-2
Menus 10-3

Install/Service menu

WARNING Do not enter the Install/Service menu when a patient is connected to the ventilator. Ventilation will cease, and the ventilator must be powered down in order to get back into Therapy.

CAUTION Changes made in the Installation mode will affect the system configuration. All changes made are permanent and preserved until changed again.

There are several settings which may be changed in the Installation mode. These changes should only be made by the person responsible for the configuration of the ventilator.

Important The EC must be turned off in order to exit the Install/Service menu.

The password for entering the Install/Service menu is 23, 17, 21.

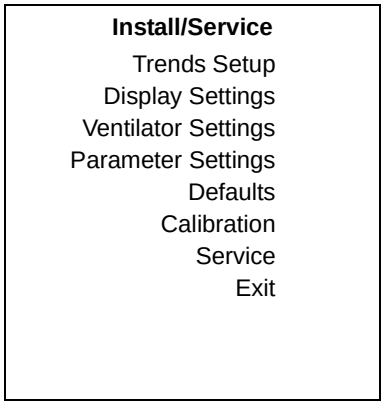

Menus

The following is a list of the menu selections available.

Not all menu items are available and may depend on the system configuration. Inactive menu items are grayed out and are not selectable.

Menu selections shown below are the factory default values for adult or pediatric patient types. The options are listed to the right of the menu shown. Units selected must conform to local requirements.

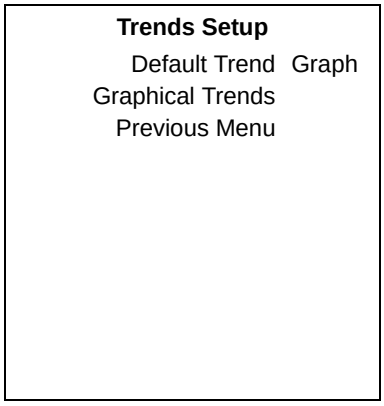

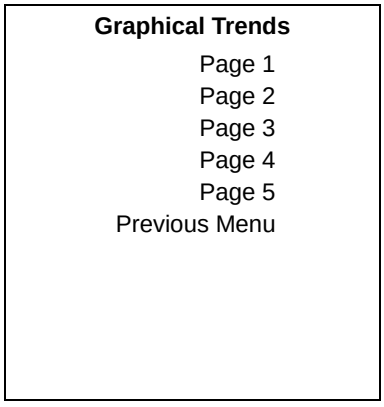

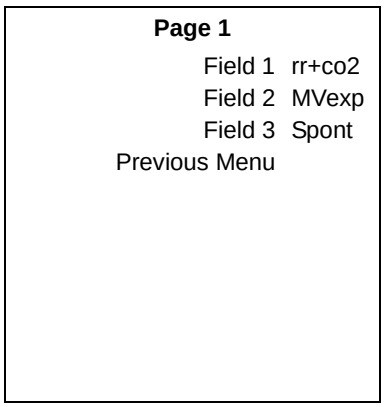

*Off, rr+co2, Pres, Pmean, PEEP, MVexp, Spont, Compl, Spiro, Paux, VO2, vo2/m2, VO2/kg, EE/RQ

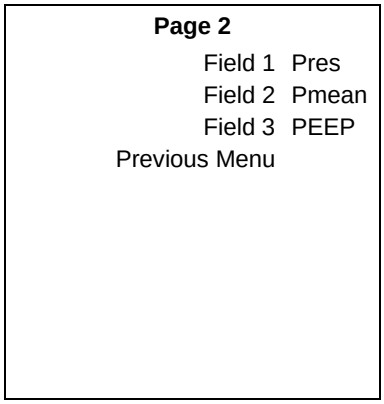

*Off, rr+co2, Pres, Pmean, PEEP, MVexp, Spont, Compl, Spiro, Paux, VO2, vo2/m2, VO2/kg, EE/RQ

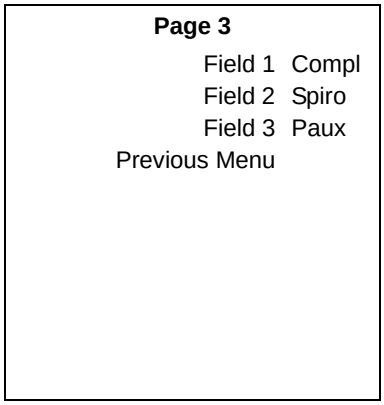

*Off, rr+co2, Pres, Pmean, PEEP, MVexp, Spont, Compl, Spiro, Paux, VO2, vo2/m2, VO2/kg, EE/RQ

* The Field 1, Field 2, and Field 3 selections are the same for all fields.

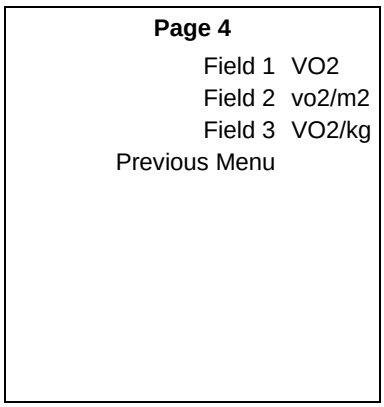

*Off, rr+co2, Pres, Pmean, PEEP, MVexp, Spont, Compl, Spiro, Paux, VO2, vo2/m2, VO2/kg, EE/RQ

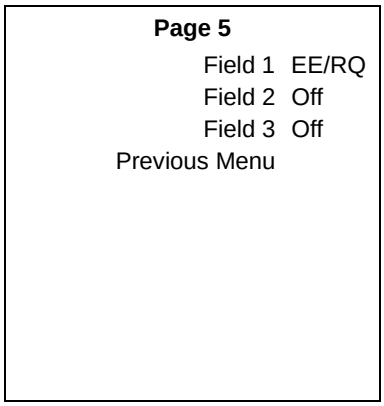

*Off, rr+co2, Pres, Pmean, PEEP, MVexp, Spont, Compl, Spiro, Paux, VO2, vo2/m2, VO2/kg, EE/RQ

* The Field 1, Field 2, and Field 3 selections are the same for all fields.

Display Settings		
Colors		
Units		
Show Alarm Limits	Yes*	Yes or No
Time and Date		
Previous Menu		

* Selecting ***Yes*** for ***Show Alarm Limits*** will display the alarm limits next to the measured values on the normal screen.

Colors		
Paw	Yellow	Yellow, White, Green, Red, or Blue
Flow	Green	Yellow, White, Green, Red, or Blue
O2	White	Yellow, White, Green, Red, or Blue
CO2	White	Yellow, White, Green, Red, or Blue
Volume	White	Yellow, White, Green, Red, or Blue
Paux	White	Yellow, White, Green, Red, or Blue
Previous Menu		

Units		
Paw	cmH2O	kPa, cmH2O, mbar
Flow	l/min	l/min or l/s
CO2	%	%, kPa, mmHg
Height	cm	cm or in
Weight	kg	kg or lb
Energy Expenditure	kcal/d	kcal/d or kJ/d
Altitude	m	m or ft
Gas Supply Pressure	kPa	psi, kPa, or bar
Exit		

Time and Date		
Hour	12a	12a to 12p or 0 to 23
Minutes	0	0 to 59
Zero Seconds		
Day	1	1 to 31
Month	Jan	Jan, Feb, Mar, Apr, May, Jun, Jul, Aug, Sep, Oct, Nov, Dec
Year	2005	2003 to 2070
Clock Format	24 h	12h or 24h
Previous Menu		

Ventilator Settings		
Timing	I:E	I:E, Tinsp, Tpause
Flow	Off	On or Off
Modes with Backup		
Previous Menu		

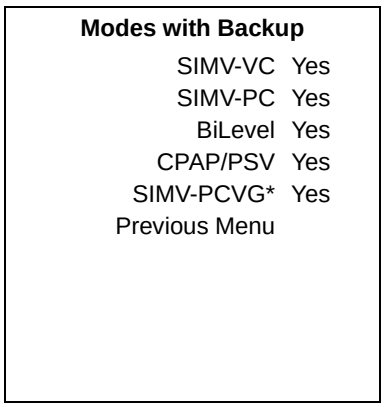

*SIMV-PCVG or BiLevel-VG modes will display in this location if they are installed.

WARNING The settings in the ***Modes with Backup*** menu determine which modes will have backup ventilation when insufficient spontaneous breathing is detected. Before deactivating backup ventilation for a specific mode, ensure that all users at the facility have been trained and notified of these settings.

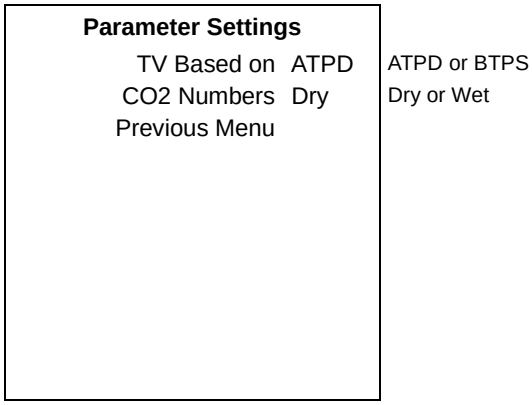

Default menus

Defaults are the settings that appear in the menus when the ventilator is first powered on. Many of these may be changed to configure the ventilator to the facility's preference.

The ***Default Type*** indicates the selection for ***Patient Type*** in the Select Patient menu on power up.

Defaults		
Scroll Settings		
Default Type	Adult	Adult or Ped
View:		
Adult		
Pediatric		
Factory		
Save Current	No	No or Yes
Factory Reset	No	No or Yes
Previous Menu		

Viewing default settings

Adult, Pediatric, and Factory default settings may be viewed in the Defaults menu.

1. Push **System Setup**.
2. Select ***Install/Service*** and enter the password.
3. Select ***Defaults*** - ***Adult***, ***Pediatric*** or ***Factory***.
4. Select ***Scroll Settings*** to scroll through the current default view.

Changing default settings

1. Turn the ventilator on.
2. Select the desired patient type, ventilation mode, ventilation settings and alarm limits, as described in *"Preparing the ventilator for a patient"* in section 4.
3. Push **System Setup**.
4. Select ***Install/Service*** and enter the password.
5. Select ***Defaults*** - ***Save Current*** - ***Yes***.
6. Turn the ventilator off.

Repeat the process for the other patient type.

Factory defaults are the settings Datex-Ohmeda has installed. These cannot be changed. To return the ventilator to the factory defaults, select ***Factory Reset*** - ***Yes***.

Calibration menus

Several calibrations and tests may be performed through the Calibration menu. Selecting a menu item will automatically begin the calibration or test. Calibrations can be performed more frequently, as needed, for optimal performance.

Calibration	Recommended Frequency
O2 FCV	6 months
Air FCV	6 months
Exhalation Valve	6 months
Backlight Test	1 month
Gas Calibration	2 months

Upon initial installation or software upgrade, a general message will be set on the display indicating when a calibration is needed. To clear this message after calibration, select ***Cal. Flag*** - ***Off***.

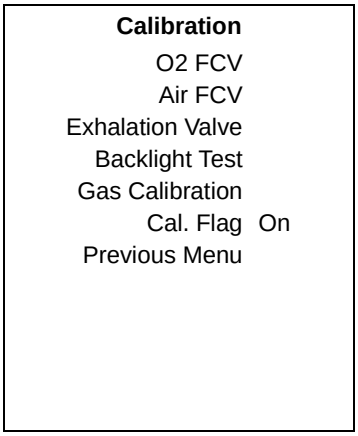

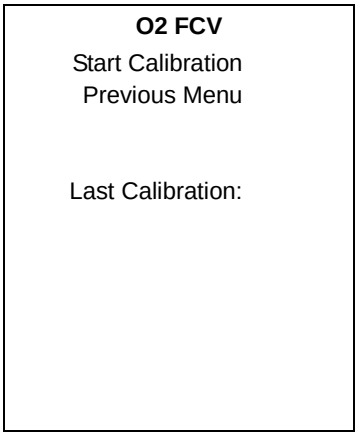

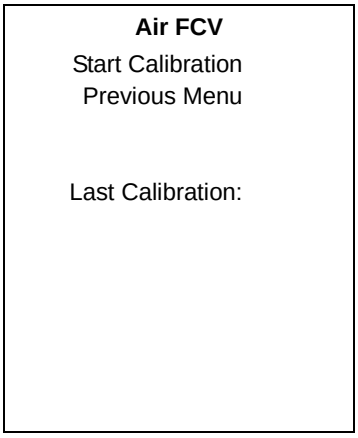
Air FCV
Start Calibration
Previous Menu
Last Calibration:

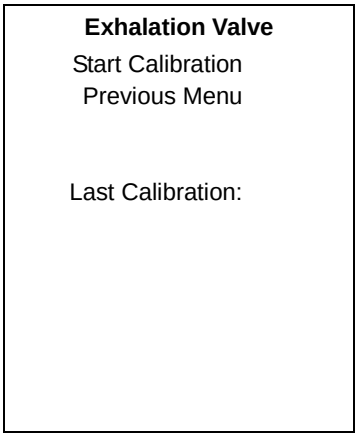
Exhalation Valve
Start Calibration
Previous Menu
Last Calibration:

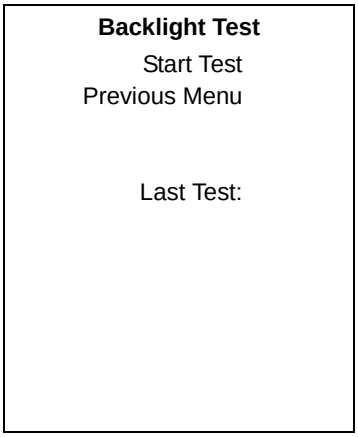
Backlight Test
Start Test
Previous Menu
Last Test:

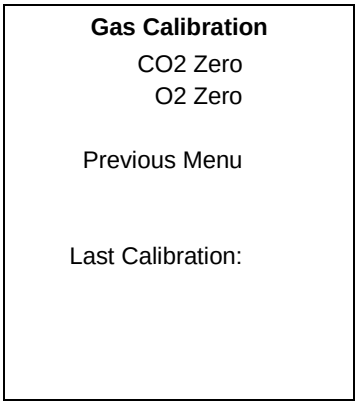
Gas Calibration
CO2 Zero
O2 Zero
Previous Menu
Last Calibration:

11 Specifications

In this section

Physical specifications 11-2
Environmental specifications 11-2
Pneumatic specifications 11-2
Electrical specifications 11-3
Ventilation operating specifications 11-5
Ventilator monitoring specifications 11-9
Airway module specifications 11-10
EVair 03 compressor 11-12
Electromagnetic compatibility (EMC) 11-15
Electrical safety 11-19
IEC-60601-1 Classification 11-19

Physical specifications

All specifications are approximate values and can change without notice.

EC with the cart

Height (display up)	144 cm
Height (display down)	123 cm
Width	53 cm
Depth	78 cm
Weight	66 kg

EC without the cart

Height (display up)	66 cm
Height (display down)	46 cm
Width	38 cm
Depth	36 cm
Weight	29 kg

Environmental specifications

	Thermal	**Humidity**	**Altitude**
Operating range	10 to 40°C	15 to 95% RH, non-condensing	-440 to 3565 m (800 to 500 mmHg)
Storage range	-20 to 65°C	15 to 95% RH, non-condensing	-440 to 5860 m (800 to 375 mmHg)

Pneumatic specifications

Supply gas	Medical air and oxygen
Supply pressure - max	6.5 bar (94 psi)
Supply pressure - min	2.4 bar (35 psi)
Supply gas flow - peak	160 l/min per gas supply
Maximum flow	180 l/min
Maximum limited pressure	100 cmH_2O
Range of inspiratory pressure	5 to 100 cmH_2O ± 10%
Minimum limited pressure (subatmospheric)	-1.5 cmH_2O
Internal compliance	0.189 ml/cmH_2O
Maximum working pressure range	7 to 100 cmH_2O

Negative pressure is not available in the expiratory phase.

In the event that the ventilator is unable to provide pneumatic support, spontaneous respiration may be achieved with these inspiratory resistances and a 1.5 m circuit:

- -4.7 cmH_2O at 60 l/min and TV > 300 ml.
- -2.3 cmH_2O at 30 l/min and 30 ml < TV < 300 ml.
- -1.1 cmH_2O at 5 l/min and TV < 30 ml.

Electrical specifications

WARNING Use the battery if the integrity of the protective earth conductor is in doubt.

Supply voltage	85 to 132 Vac 187 to 264 Vac	47 to 63 Hz
Electrical power consumption	< 200 W	

Fuses

Type	Rating	Replacement	Part Number
Mini blade	15 A	Contact a Datex-Ohmeda trained service representative.	1011-3485-000
5 x 20 mm time delayed	2 A, 250 V	Power down and unplug ventilator. Remove screws to plate covering fuse. Remove fuse and replace with a new fuse. (See Figure 2-2 for location of fuse.)	1503-3073-000

Battery information

WARNING Check performance of battery annually; replace when necessary.

Use only Datex-Ohmeda recommended batteries.
Only Datex-Ohmeda trained service representatives are to replace the batteries. Batteries will slowly discharge when the system is not plugged in. Datex-Ohmeda recommends periodically plugging the system in to AC mains to recharge the internal batteries. Batteries must be disposed of in accordance with applicable regulatory requirements in effect at the time and place of disposal.

Internal batteries

The system is not intended for use during the transport of patients between facilities. Two internal 12 Vdc sealed lead-acid batteries supply battery backup. Batteries are used as backup power in case of a power failure. The battery is in a float charge state as long as the system is connected to a primary electrical source.

- Capacity to operate for 30 to 120 minutes, depending on settings, under normal operating conditions.
- Ampere-hour rating: 4 A-h
- Voltage requirement: 12 Vdc
- Current requirement: 7.5 A
- Shelf life: 9 months following last charge.
- Recharge time: full discharge to full charge in 8 hours.
- Estimated life: four to six years; 250 100% discharge cycles.
- The ***System Status*** menu shows the status of the internal battery.

Ventilation operating specifications

Ventilation delivery specifications

The following requirements apply to ventilation delivery and monitoring under the following conditions:

- Power-up self tests performed at ambient conditions and after a 10 minute warm-up period.
- Completed and passed all checkout tests.
- Operating at steady state (for example, after stabilized following a patient or setting change).
- Operating with and without a humidifier.
- Operating with and without a Datex-Ohmeda heat-moisture exchanger.
- Operating at EN794 and ASTM F1100 patient conditions.
- Operating at 21°C and at 1000 mbar ambient pressure.
- All volumes are at ambient temperature and pressure, dry (ATPD).

Ventilation settings

Refer to Section 13 - Neonatal Option for Neonatal specifications.

Control	Range	Resolution
Bias Flow	2 to 10 l/min	0.5 l/min
End Flow	5 to 50%	5%
FiO2	21 to 100%	1%
Flow	2 to 160 l/min (Adult) 2 to 90 l/min (Ped)	2 to 40 by 1 l/min 40 to 160 by 5 l/min
Flow Trigger	1 to 9 l/min	1 to 3 by 0.1 l/min 3 to 9 by 0.5 l/min
I:E	1:9 to 4:1 1:9 to 9:1 (BiLevel only through Thigh and Tlow settings)	0.1
Insp Pause	0 to 75%	5%
Minute Volume	0.5 to 90 l/min	None. Not a direct user setting.
PEEP	Off, 1 to 50 cmH_2O	1 cmH_2O
Phigh	1 to 98 cmH_2O	1 cmH_2O
Pinsp	1 to 98 cmH_2O	1 cmH_2O
Plimit	7 to 100 cmH_2O	1 cmH_2O
Plow	Off, 1 to 50 cmH_2O	1 cmH_2O
Pmax	7 to 100 cmH_2O	1 cmH_2O
Pressure Trigger	-10 to -1 cmH_2O	-10 to -3 by 0.5 cmH_2O -3 to -0.25 by 0.25 cmH_2O
Psupp	0 to 60 cmH_2O	1 cmH_2O
PSV Rise Time	0 to 500 ms	50 ms
Rate	3 to 120 /min 1 to 60 /min (SIMV and BiLevel-VG modes only)	1 /min
Rise Time	0 to 500 ms	50 ms

Control	Range	Resolution
Thigh	0.25 to 15 s	0.25 to 1 by 0.05 s 1 to 4 by 0.1 s 4 to 15 by 0.25 s
Tinsp	0.25 to 15 s	0.25 to 1 by 0.05 s 1 to 4 by 0.1 s 4 to 15 by 0.25 s
Tlow	0.25 to 18 s	0.25 to 1 by 0.05 s 1 to 4 by 0.1 s 4 to 18 by 0.25 s
Tpause	0 to 11 s	0 to 1 by 0.05 s 1 to 4 by 0.1 s 4 to 11 by 0.25 s
Trig Window	0 to 80%	5%
TV	20 to 2000 ml	20 to 50 by 1 ml 50 to 100 by 5 ml 100 to 300 by 10 ml 300 to 1000 by 25 ml 1000 to 2000 by 50 ml

Waveforms

Waveform	Filtering Technique
Paw	13 ms low pass filter.
Flow	125 ms moving average.
Volume	Running integration of the flow waveform.
CO_2	< 400 ms rise time.
O_2	< 400 ms rise time.

Nebulizer

>0.2 ml/min

Tidal volume delivery

Mixture accuracy is measured at one meter from the outlet port.

Accuracy	± 10% of setting or ± 5 ml, whichever is greater
1σ repeatability	± 2% or ± 3 ml, whichever is greater
Change response time 90% full scale (FS)	< 6 breaths

Inspired pressure control

These values apply only to PCV and CPAP/PSV modes. Pressure responses are measured from the beginning of the measured pressure step change.

Accuracy	± 2 cmH_2O
1σ repeatability	± 1 cmH_2O

PEEP control

Pressure responses are measured from the beginning of the measured pressure step change.

Accuracy	± 2 cmH_2O
1σ repeatability	± 1 cmH_2O

Oxygen - air mixing accuracy

Mixture accuracy is measured at one meter from the outlet port.

Accuracy	± 3% volume/volume of setting
1σ repeatability	± 1% volume/volume of setting
Mixture deviation > 75 ms within inspiratory phase of breath	± 5% volume/volume at steady state level
Change response time - 90% FS	< 6 breaths or 30 seconds, whichever is longer

Inspiratory and expiratory resistance

The Datex-Ohmeda circuits recommended for this ventilator do not exceed values of 6 cmH_2O for flows at 60 l/min (adult) and 30 l/min (pediatric) when used with the breathing circuits listed in the *“Parts”* section.

Ventilator monitoring specifications

Measurements

This section only covers those measurements specific to the ventilator.

Several measurements have the same range, resolution, filtering technique, and accuracy and are grouped together in the table.

Measurements	Range	Resolution	Filtering Technique	Accuracy
Ppeak Pmean Pplat PEEPe PEEPi PEEPe+i Paux Peak Paux Mean Paux Min	-20 to 120 cmH_2O	1 cmH_2O	13 ms low pass filter.	± 2 cmH_2O
MVexp MVinsp MVspont	0 to 99.9 l/min	0.1 l/min	Running value for the last one minute + one breath.	See TV accuracy.
TVexp TVinsp TVspont	5 to 2500 ml at flows between 1 and 200 l/min	1 ml	Value from the last detected breath.	± 10% or ± 15 ml, whichever is greater.
RR RRspont	0 to 120 /min	1 /min	Running value for the last one minute + one breath.	± 1/min
Compl	1 to 999 ml/cmH_2O	1 ml/cmH_2O	Five breath median filter. After an inspiratory hold procedure, static compliance will be displayed for 5 breaths.	---
Raw	0 to 1000 cmH_2O/l/s	1 cmH_2O/l/s	Five breath median filter.	---
FiO2	10 to 100%	1%	15 s moving average.	± 3% volume/volume with < 30 s, 10 to 90% FS response Drift: 0.0025% in 24 h
RSBI	0 to 999 /min/l	1 /min/l	Running value for the last one minute + one breath.	See TV and RR accuracy.

Alarm settings

Alarm	Range	Default
Pmax	7 to 100 cmH_2O	Set Plimit + 10 cmH_2O
Low Ppeak*	1 to 97 cmH_2O	4 cmH_2O
Low MVexp	0.01 to 40 l/min	2 l/min
High MVexp	0.4 to 99 l/min	10 l/min
Low TVexp	Off, 5 to 1950 ml	Off
High TVexp	10 to 2000 ml, Off	Off
Low RR	Off, 1 to 99 /min	Off
High RR	2 to 120/min, Off	Off
Low EtCO2	Off, 0.1 to 14.9%	3%
High EtCO2	0.2 to 15%, Off	8%
Low EtO2	Off, 10 to 99%	Off
High EtO2	11 to 100%, Off	Off
Low FiO2	18 to 99%	Set O2 - 6%
High FiO2	24 to 100%, Off	Set O2 + 6%
High PEEPe	Off, 5 to 50 cmH_2O	Off
Low PEEPe	Off, 0 to 20 cmH2O	Off
High PEEPi	Off, 1 to 20 cmH2O	Off
Paux	12 to 100 cmH_2O	30 cmH_2O

Airway module specifications

This system is compatible with the E series modules E-miniC, E-CO, E-COV, E-COVX, E-CAiO, E-CAiOV, and E-CAiOVX and the M series modules M-miniC, M-CO, M-COV, M-COVX, M-CAiO, M-CAiOV, and M-CAiOVX. (Modules must be software revision 3.2 and above.)

Gas specifications

Airway humidity	0 to 100% condensing
Sampling delay	2.5 seconds typical with a 3 m sampling line
Total system response time	2.9 seconds typical with a 3 m sampling line, including sampling delay and rise time
Warm-up time	2 minutes for operation with CO_2, O_2, and N_2O 5 minutes for operation of anesthetic agents 30 minutes for full specifications

Important The system is not intended for use with anesthetic agents.

	Accuracy under different conditions:	
	• Ambient temperature 10 to 40°C, within ±5°C of calibration • Ambient pressure 500 to 800 mmHg, ±50 mmHg of calibration • Ambient humidity 10 to 98% Rh, ±20% RH of calibration • During warm-up 10 to 30 minutes, under normal conditions.	• During warm-up 2 to 10 minutes (anesthetic agents 5 to 10 minutes), under normal conditions.
CO_2	± (0.3 vol% + 4% of reading)	± (0.4 vol% + 7% of reading)
O_2	± (2 vol% +2% of reading)	± (3 vol% + 3% of reading)

Typical performance

CO_2	Measurement range 0 to 15 vol% (0 to 15 kPa, 0 to 113 mmHg). Measurement rise time <400 ms typical. Accuracy ± (0.2 vol% +2% of reading). Gas cross effects <2 vol% (O_2, N_2O, anesthetic agents).
O_2	Measurement range 0 to 100 vol%. Measurement rise time <400 ms typical. Accuracy ± (1 vol% +2% of reading). Gas cross effects <1 vol% anesthetic agents, <2 vol% N_2O.
VCO_2 and VO_2	Measurement range 20 to 1000 l/min Accuracy (valid for respiration rates of 4 to 35/min FiO_2 <65 ± 10% or 10 ml 65% ≤ FiO_2 < 85% ± 15% or 15 ml
FRC	Accuracy ± 20% or 180 ml Repeatability ± 10% when conducted under the same settings and conditions.

EVair 03 compressor

Specifications

Pneumatic	
Output flow (continuous)	≥ 36 l/min at 500 kPa (72 psi)
Output flow (peak)	≥ 160 l/min
Reserve capacity	1.5 liters at output pressure
Air quality	oil-less design ISO compressed air purity classes ISO 8573-1 1,7,1 CGA Compressed Air for Human Respiration Type I, Grade E
Dew point depression (pump)	≥ 5°C below ambient temperature at maximum output pressure and flow
Output pressure (pump)	550 kPa (80 psi) nominal
Reserve operation	≥ 250 kPa (36 psi) pipeline pressure
Safety relief valve	1000 ± 100 kPa (145 ± 14.5 psi)

Electrical	
120 V~, 60 Hz, 15 A	Operating voltage must be 120 V ± 10%
230 V~, 50 Hz, 10 A	Operating voltage must be 230 V ± 10%
Compressor pump	Protected internally with circuit breaker rated at 9 A for 120 V, and 5 A for 230 V
Accessory outlet	Reverse IEC 60320 powers designated Datex-Ohmeda accessories only

Compressor pneumatic diagram

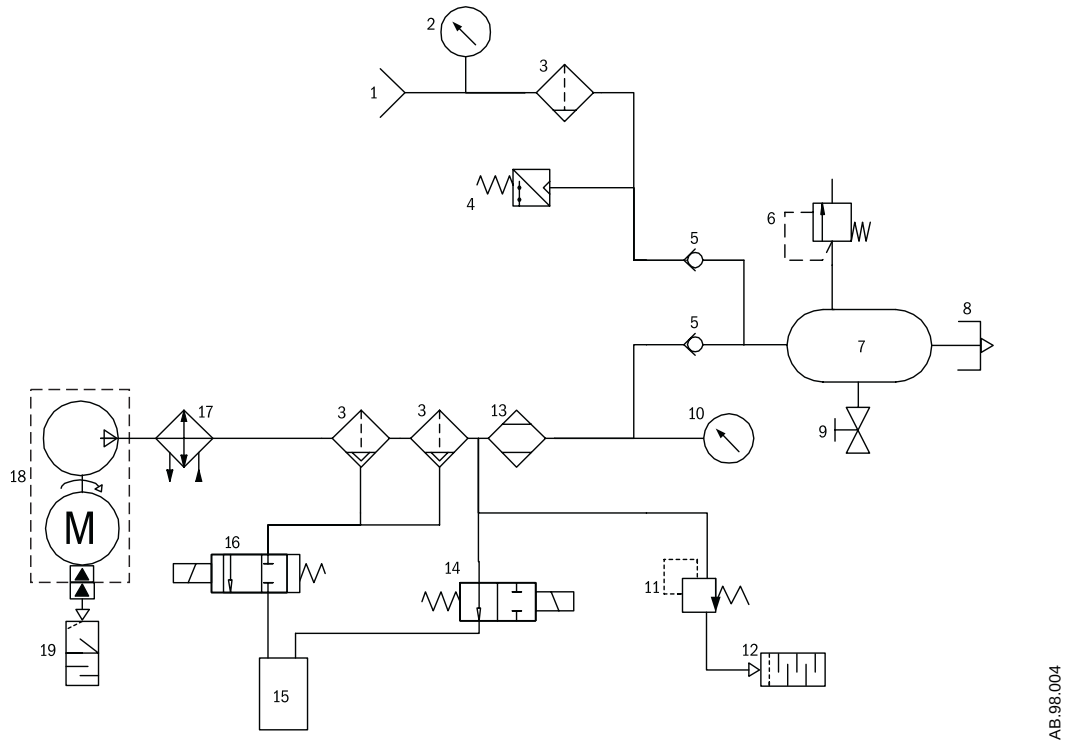

1. Pipeline air inlet
2. Pipeline pressure gauge
3. Filter
4. Pressure switch
5. Uni-directional valve
6. Safety relief valve
7. Reservoir
8. Outlet
9. Manual drain
10. Pump pressure gauge
11. Pressure limiting valve
12. Muffler
13. Membrane air dryer
14. Start-up valve
15. Drain bottle
16. Drain valve
17. Heat exchanger
18. Pump
19. Inlet filter/muffler

Figure 11-1 • Pneumatic diagram of compressor

Compressor electrical block diagram

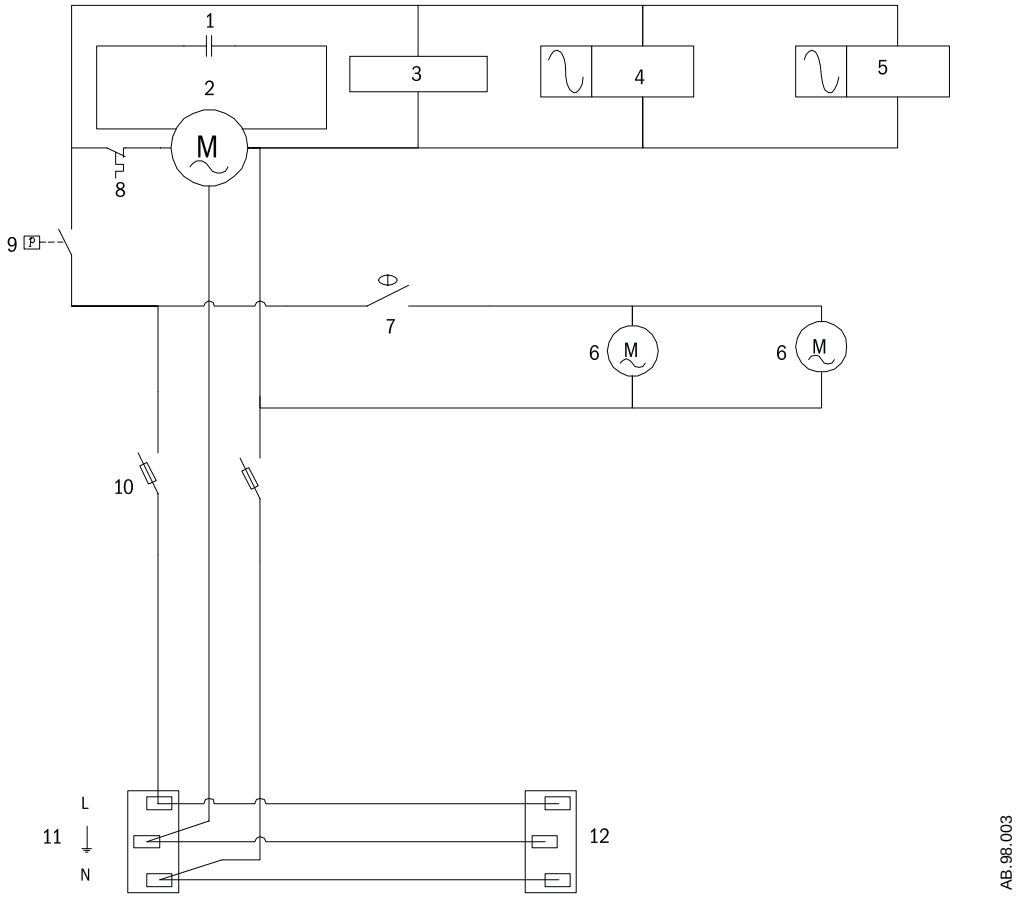

1. Capacitor
2. Pump
3. Hourmeter
4. Drain valve
5. Start-up valve
6. Fan
7. Temperature switch
8. Thermal switch
9. Pressure switch
10. Power switch/circuit breaker
11. AC mains inlet
12. Accessory outlet

Figure 11-2 • Electrical diagram for compressor

Electromagnetic compatibility (EMC)

Changes or modifications to this equipment not expressly approved by Datex-Ohmeda could cause EMC issues with this or other equipment. Contact Datex-Ohmeda for assistance. This device is designed and tested to comply with applicable regulations regarding EMC as follows.

WARNING Use of portable phones or other radio frequency (RF) emitting equipment near the system may cause unexpected or adverse operation. Monitor operation when RF emitters are in the vicinity.

⚠ Use of other electrical equipment on or near this system may cause interference. Verify normal operation of equipment in your configuration before use on patients.

Guidance and manufacturer's declaration - electromagnetic emissions

The system is suitable for use in the specified electromagnetic environment. The customer and/or the user of the system should assure that it is used in an electromagnetic environment as described below.

Emissions test	Compliance	Electromagnetic environment guidance
RF emissions CISPR 11	Group 1	The system uses RF energy only for its internal function. Therefore, its RF emissions are very low and are not likely to cause any interference in nearby electronic equipment.
RF emissions CISPR 11	Class B	The system is suitable for use in all establishments, including domestic establishments and those directly connected to the public low-voltage power supply network that supplies buildings used for domestic purposes.
Harmonic emissions IEC 61000-3-2 Class A	Class A	
Voltage fluctuations/ flicker emissions IEC 61000-3-3	Complies	

Guidance and manufacturer's declaration - electromagnetic immunity

The system is suitable for use in the specified electromagnetic environment. The customer and/or the user of the system should assure that it is used in an electromagnetic environment as described below.

Power immunity

Immunity test	IEC 60601-1-2 test level	Compliance level	Electromagnetic environment guidance
Electrostatic discharge (ESD) IEC 61000-4-2	± 6 kV contact ± 8 kV air	± 6 kV contact ± 8 kV air	Floors should be wood, concrete, or ceramic tile. If floors are covered with synthetic material, the relative humidity should be at least 30%.
Electrical fast transient/burst IEC 61000-4-4	± 2 kV for power supply lines ±1 kV for input/output lines	± 2 kV for power supply lines ±1 kV for input/output lines	Mains power quality should be that of a typical commercial and/or hospital environment.
Surge IEC 61000-4-5	± 1 kV differential mode ±2 kV common mode	± 1 kV differential mode ±2 kV common mode	Mains power quality should be that of a typical commercial and/or hospital environment.
Voltage dips, short interruptions and voltage variations on power supply input lines IEC 61000-4-11	< 5% U_T (> 95% dip in U_T) for 0.5 cycle 40% U_T (60% dip in U_T) for 5 cycles 70% U_T (30% dip in U_T) for 25 cycles < 5% U_T (> 95% dip in U_T) for 5 sec.	< 5% U_T (> 95% dip in U_T) for 0.5 cycle 40% U_T (60% dip in U_T) for 5 cycles 70% U_T (30% dip in U_T) for 25 cycles < 5% U_T (> 95% dip in U_T) for 5 sec.	Mains power quality should be that of a typical commercial and/or hospital environment. If the user of the system requires continued operation during power mains interruptions, it is recommended that the system be powered from an uninterruptible power supply or a battery.
Power frequency (50/60 Hz) magnetic field IEC 61000-4-8 3	3 A/m	3 A/m	If display distortion or other abnormalities occur, it may be necessary to position the system further from sources of power frequency magnetic fields or to install magnetic shielding. The power frequency magnetic field should be measured in the intended installation location to assure that it is sufficiently low.
Note: U_T is the AC mains voltage before application of the test level.			

Radiated immunity

Immunity test	IEC 60601-1-2 test Level	Compliance level	Electromagnetic environment guidance Recommended separation distance
			Portable and mobile RF communications equipment should be used no closer to any part of the system, including cables, than the recommended separation distance calculated from the equation appropriate for the frequency of the transmitter.
Conducted RF IEC 61000-4-6	3 Vrms 150 kHz to 80 MHz outside ISM bands	3 Vrms (V1)	$D=3.5\sqrt{P}$
	10 Vrms 150 kHz to 80 MHz in ISM bands	10 Vrms (V2)	$D=12\sqrt{P}$
Radiated RF IEC 61000-4-6	10 V/m	10 V/m (E1)	$D=1.2\sqrt{P}$ 80 mHz to 800 mHz
	80 MHz to 2.5 GHz		$D=3.5\sqrt{P}$ 800 mHz to 2.5 GHz Where P is the maximum output power rating of the transmitter in watts (W) according to the transmitter manufacturer and D is the recommended separation distance in meters (m). Field strengths from fixed RF transmitters, as determined by an electromagnetic site survey, should be less than the compliance level in each frequency range.

The ISM (industrial, scientific and medical) bands between 150 kHz and 80 MHz are 6.765 MHz to 6.795 MHz; 13.553 MHz to 13.567 MHz; 26.957 MHz to 27.283 MHz; and 40.66 MHz to 40.70 MHz.
The compliance levels in the ISM frequency bands between 150 kHz and 80 MHz and in the frequency range 80 MHz to 2.5 GHz are intended to decrease the likelihood that a portable communications device could cause interference if it is inadvertently brought into patient areas. For this reason, an additional factor of 10/3 is used in calculating the recommended separation distance for transmitters in these frequency ranges.
Field strengths from fixed transmitters, such as base stations for radio (cellular/cordless) telephones and land mobile radios, amateur radio, AM and FM radio broadcast, and TV broadcast cannot be predicted theoretically with accuracy. To assess the electromagnetic environment due to fixed RF transmitters, an electromagnetic site survey should be considered. If the measured field strength in the location in which the system is used exceeds the applicable RF compliance level above, the system should be observed to verify normal operation. If abnormal performance is observed, additional measures may be necessary, such as re-orienting or relocating the system.
Over the frequency range 150 kHz to 80 MHz, field strengths should be less than 1 V/m.
Note: These guidelines may not apply in all situations. Electromagnetic propagation is affected by absorption and reflection from structures, objects, and people.

Recommended separation distances

The system is intended for use in the electromagnetic environment in which radiated RF disturbances are controlled. The customer or the user of the system can help prevent electromagnetic interference by maintaining a minimum distance between portable and mobile RF communications equipment (transmitters) and the system as recommended below, according to the maximum power of the communications equipment.

Rated maximum output power of transmitter watts (W)	Separation distance in meters (m) according to frequency of the transmitter			
	150 kHz to 80 MHz Outside ISM bands $D = \left[\frac{3.5}{V1}\right]\sqrt{P}$	**150 kHz to 80 MHz In ISM bands** $D = \left[\frac{12}{V2}\right]\sqrt{P}$	**80 MHz to 800 MHz** $D = \left[\frac{1.2}{E1}\right]\sqrt{P}$	**800 MHz to 2.5 GHz** $D = \left[\frac{2.3}{E1}\right]\sqrt{P}$
0.01	0.35	1.2	0.12	0.23
0.1	1.1	3.8	0.38	0.73
1	3.5	12	1.2	2.3
10	11	38	3.8	7.3
100	35	120	12	23

For transmitters rated at a maximum output power not listed above, the recommended separation distance D in meters (m) can be determined using the equation applicable to the frequency of the transmitter, where P is the maximum output power rating of the transmitter in watts (W) according to the transmitter manufacturer.

Note 1: At 80 MHz to 800 MHz the separation distance for the higher frequency range applies.

Note 2: The ISM (Industrial, Scientific and Medical) bands between 150 kHz and 80 MHz are 6.765 MHz to 6.795 MHz; 13.553 MHz to 13.567 MHz; 26.957 MHz to 27.283 MHz; and 40.66 MHz to 40.70 MHz.

Note 3: An additional factor of 10/3 is used in calculating the recommended separation distance for transmitters in the ISM frequency bands between 150 kHz and 80 MHz and in the frequency range 80 MHz to 2.5 GHz to decrease the likelihood that mobile/portable communications equipment could cause interference if it is inadvertently brought into patient areas.

Note 4: These guidelines may not apply in all situations. Electromagnetic propagation is affected by absorption and reflection from structures, objects, and people.

Electrical safety

The system provides connections for items such as printers, visual displays and hospital information networks. When these items (non-medical equipment) are combined with the system, these precautions must be followed:

- Do not place items not approved to IEC 60601-1 closer than 1.5 m to the patient.
- All items (medical electrical equipment or non-medical electrical equipment) connected to the system by a signal input/signal output cable must be supplied from an AC power source which uses a separating transformer (in accordance with IEC 60989) or be provided with an additional protective earth conductor.
- If a portable multiple socket outlet assembly is used as an AC power source, it must comply with IEC 60601-1. The assembly must not be placed on the floor. Using more than one portable multiple socket outlet assembly is not recommended.

Do not connect non-medical electrical equipment directly to the AC outlet at the wall instead of an AC power source which uses a separating transformer. Doing so may increase enclosure leakage current above levels allowed by IEC 60601-1 in normal conditions and under single-fault conditions. This may cause an unsafe electrical shock to the patient or operator.

After connecting anything to these outlets, conduct a complete system leakage current test (according to IEC 60601-1).

WARNING An operator of the medical electrical system must not touch non-medical electrical equipment and the patient simultaneously. This may cause an unsafe electrical shock to the patient.

IEC-60601-1 Classification

The system is classified as follows.

- Class I equipment.
- Type B equipment.
- Type BF equipment.
- Ordinary equipment.
- Not for use with flammable anesthetics.
- Continuous operation.

12 INview ventilation tools

In this section

FRC 12-2
SpiroDynamics 12-8
Lung INview 12-13
Troubleshooting 12-15
Alarms 12-16

FRC

FRC theory

The measurement of Functional Residual Capacity (FRC) represents the volume in the lungs at the end of a normal expiration. An increase in the FRC indicates hyper-inflation due to an increased resistance or a specific disease like emphysema. A decrease in FRC indicates a patient with reduced lung compliance. The FRC value calculation is accessed through the FRC INview menu. The FRC calculation is based on the nitrogen washout method using a step change in the oxygen/air concentration delivered to the patient by the ventilator.

The FRC value is calculated through the use of a D-lite sensor and an airway module with energy expenditure capabilities (E-COVX, E-CAiOVX, M-COVX, M-CAiOVX).

An FRC procedure takes two measurements. When an FRC procedure is started, the system captures a baseline of N2 concentration and then changes the set O2 to the set FRC O2. After a few breaths, a curve beings to plot on the graph. A measurement takes approximately 20 breaths. Upon completion of the first measurement the FRC value is displayed, the N2 concentration is captured, and the O2 changes back to the original set O2. The second measurement starts. After a few breaths, the second curve begins to plot on the graph. When the second measurement is completed, the second FRC value is displayed.

Performing FRC

The FRC can be performed as a single procedure or as a series of procedures. When FRC is performed in a series, the measurements continue at the set interval until the user stops the series. Measurements are displayed numerically and graphically.

Two volume curves show in the graph and two measurements are listed in the data area below the graph.

When another FRC procedure is performed:

- The two measurements are averaged and move down one row. The values from the most recent five procedures are shown.
- The two curves are averaged into one single reference curve. The four remaining curves are saved in the reference curve memory.

If the value of the second measurement for the FRC procedure is not within 25% of the first FRC measurement, the curves and values are not averaged.

Important A constant level of delivered O2 is needed to capture an accurate baseline N2 concentration for the nitrogen washout process. The first FRC measurement may be inaccurate if the delivered O2 is changed within 5 minutes of starting an FRC measurement.

Important Adding a 5-ml spacer between the D-lite sensor and the patient wye will prevent the bias flow from adversely affecting the metabolic measurements.

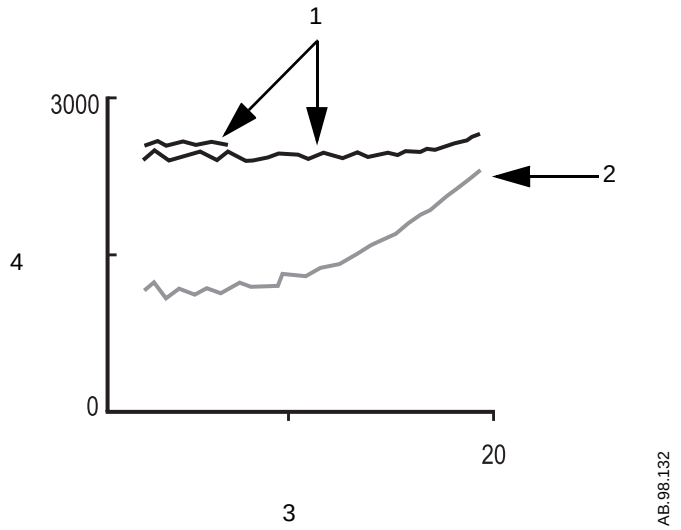

1. Current curves
2. Reference curve
3. Number of breaths axis
4. FRC volume axis

Figure 12-1 • FRC INview graph

Important Do not change any ventilation settings, perform any procedures that alter ventilation settings, perform a nebulization procedure, or remove an airway module during this procedure. These actions stop the current measurement, resulting in invalid data shown as dashes.

Important Ensure that the airway module has warmed up for 30 minutes before performing an FRC procedure.

1. Push **Spirometry**.
2. Select ***FRC INview***.
3. Set the ***FRC O2***.
   - The FRC O2 is adjustable to within plus or minus 10% of the set O2 value. The FRC O2 setting is the value used for the nitrogen washout calculation.
4. Set the ***Series Interval*** time if performing a series of procedures.
   - Set to 1 to 12 hours.
5. Select ***Start Single*** or ***Start Series***.
   - The menu item changes to ***Stop Single*** or ***Stop Series***.
   - The delivered O2 changes to the FRC O2 setting.
   - ‘FRC On’ shows in the flow waveform field.
   - ‘Calculating FRC’ shows in the general message field.

Important The series will cancel if the set O2 is decreased during a series interval when the FRC O2 was originally set lower than the O2. This prevents an unintended lower setting of FRC O2.

6. The FRC measurements are taken. The curve shows in the graph. The date, time, FRC, and PEEPe+i values show below the graph.
   - When performing a series of procedures, the FRC measurements continue at the set interval until the user stops the series. The ***Next Start*** value shows the time of the next automatic FRC procedure.
7. To show a specific reference curve, select ***Reference Curve*** and the time of the curve to display. The reference curve displays in a different color on the graph and in the data area.
8. To stop an active FRC procedure, select ***Stop Single*** or ***Stop Series***.

FRC INview scaling

The graph scaling is set to ***AUTO*** by default. To change the scaling:

1. In the ***FRC INview*** menu, select ***FRC Scaling***.
2. Set the ***FRC Scale*** and ***Breath Scale*** to the desired number.
3. Select ***Previous Menu*** to return to the ***FRC INview*** menu.

PEEP INview

The PEEP INview procedure can be used to see how a change in the PEEP value affects the FRC value. A series of FRC measurements are taken at varying PEEP levels. The first measurement is taken at the ***Initial PEEP*** value, the last measurement is taken at the ***End PEEP*** value. The measurements in between are taken at values spaced as evenly as possible across the ***Initial PEEP*** to ***End PEEP*** range. A maximum of five PEEP measurements are allowed during a PEEP INview procedure.

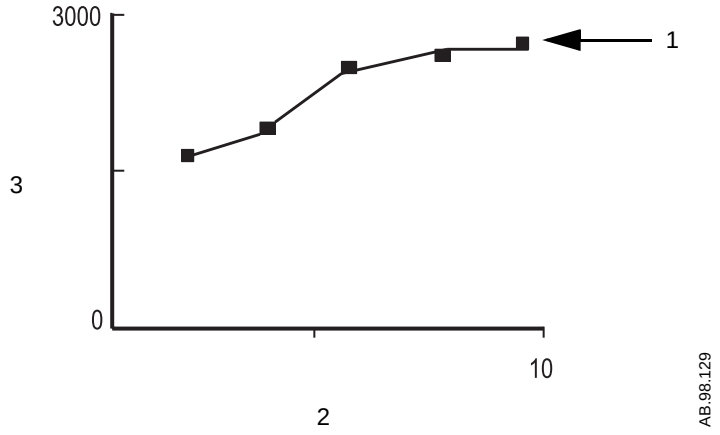

1. PEEP INview curve
2. PEEP axis
3. FRC volume axis

Figure 12-2 • PEEP INview graph

Important Do not change any ventilation settings, perform any procedures that alter ventilation settings, perform a nebulization procedure, or remove an airway module during this procedure. An interruption in the measurements can result in invalid data calculations. Invalid data shows as dashes.

1. Push **Spirometry**.
2. Select ***FRC INview - PEEP INview***.
3. Set the ***FRC O2***.
   - The ***FRC O2*** is adjustable to within plus or minus 10% of the set O2 value.The FRC O2 setting is the value used for the nitrogen washout calculation.
4. Set the ***Initial PEEP***.
5. Set the ***End PEEP***.

Note When setting the ***Initial PEEP*** and ***End PEEP***, the values are checked against the constraints from other ventilation settings. The values will be set to ***Off*** if the constraints from the other ventilation settings do not allow the PEEP values to be set. When both ***Initial PEEP*** and ***End PEEP*** are forced to ***Off***, the ***Start*** selection is disabled.

6. Set the number of ***Measurements*** to be taken.
   - The maximum setting is 5. This is the default setting.
   - If the number of measurements set is not feasible between the ***Initial PEEP*** and ***End PEEP***, the value will change to the maximum measurements possible when the procedure is started.
7. Select ***Start***.
   - The menu item changes to ***Stop***.
   - The measurements begin.
   - The delivered O2 changes to the FRC O2 setting. The delivered O2 alternates between the set O2 and the set ***FRC O2*** at each measurement.
   - A white dot is plotted on the graph at the intersection of the set PEEP and calculated FRC value to form the PEEP Curve. The expected time between each plotted measurement is approximately 50 breaths or 5 minutes.
   - The Set PEEP, FRC, and PEEPe+i values show below the graph.
   - 'FRC On' shows in the flow waveform field.
   - 'Calculating FRC' shows in the general message field.
8. To stop an active PEEP INview procedure, select ***Stop***.

FRC Log

The patient's FRC value can change after a change in the ventilation parameters or after performing a procedure. The ***FRC Log*** shows when the FRC value was calculated and specific events that occurred between FRC calculations. Analyzing the information in the ***FRC Log*** can help the user determine the positive and negative effects of events on the FRC values. The ***FRC Log*** shows the most recent 350 events in chronological order with the latest data at the top. The log is cleared when the system is turned off.

FRC measurements that are averaged for the FRC reference curves and values are not averaged in the ***FRC Log***. Both measurements will show in the log. Only the events shown in the following table will show in the log. The event, value, and date and time of the event will show.

1. To view the ***FRC Log***, push **Spirometry.**
2. Select ***FRC INview - FRC Log***.
3. Select ***Cursor***.
4. Use the ComWheel to scroll through the log.

FRC Event	Value	Cause
FRC/PEEPe+i:	Calculated FRC value from PEEP INview procedure/PEEPe+i value measured.	PEEP INview calculation of FRC.
FRC:	Calculated FRC value.	An FRC value was calculated.
FRC:	Measurement stopped.	An Active FRC procedure was terminated.
FRC:	Missed scheduled.	A planned FRC series was not run.
FRC:	Series stopped.	An FRC series was terminated by the system.
I:E:	I:E setting.	The user changed the I:E setting.
Intrinsic PEEP:	Calculated PEEPi value.	An Intrinsic PEEP procedure was performed.
Mode:	The mode.	The user changed the Vent mode.
Nebulizer:	On.	A Nebulizer procedure was started.
PEEP:	PEEP setting.	The user changed the PEEP setting.
Plow:	Plow setting.	The user changed the Plow setting.
Rate:	Rate setting.	The user changed the Rate setting.
Suction:	On.	A Suction procedure was started.
Thigh:	Thigh setting.	The user changed the Thigh setting.
Tinsp:	Tinsp setting.	The user changed the Tinsp setting.
Tlow:	Tlow setting.	The user changed the Tlow setting.
TV:	TV setting.	The user changed the TV setting.
Difference/PEEP:	Calculated difference from Lung INview procedure/set PEEP value.	Lung INview calculation of the volume difference.

SpiroDynamics

SpiroDynamics theory

SpiroDynamics is a tracheal pressure measurement obtained through a catheter that provides true tracheal pressure and intrinsic PEEP measurements regardless of the ventilation settings. SpiroDynamics is viewed through the ***SpiroD*** menu.

The measurements are captured using an intratracheal pressure catheter that is guided down a standard endotracheal or tracheostomy tubes. The catheter is connected to the auxiliary pressure port of the ventilator and attached to the patient airway. This single-patient-use catheter is easy to insert and is purged using a bias flow to help ensure that it remains open.

This in-line placement of the catheter provides a more accurate measurement of pressure delivery to the lungs by removing the resistance of the endotracheal tube from the spirometry loop. After a breath, a dynostatic curve is calculated from the loop providing an estimate of the alveolar pressure and volume. An algorithm creates the dynostatic curve based on the two pressure and two flow values for a specific volume at several points along the breath loop. This curve is an estimate of the pulmonary compliance during a breath.

Lung mechanics and a graphical tracheal P-V loop are shown on the display. Compliance values are calculated at three points along the dynostatic curve and displayed:

- BEG - between 5 and 15% of the total curve.
- MID - between 45 and 55% of the total curve.
- END - between 85 and 95% of the total curve.

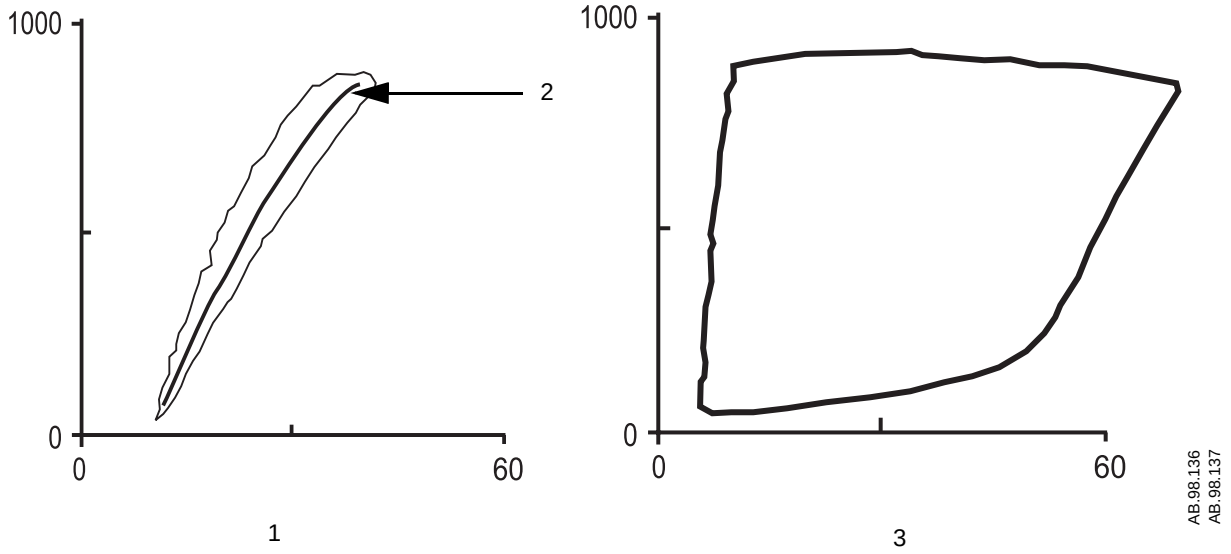

1. SpiroDynamics loop using the intratracheal catheter
2. Dynostatic curve
3. Pressure-Volume loop taken at the Y-piece

Figure 12-3 • P-V loop comparison

Important The intratracheal pressure catheter is only for pressure sensing. It cannot be used for suctioning the patient or for sampling gases. The catheter is for use only with endotracheal or tracheostomy tubes having an internal diameter equal to or larger than 6.5 mm. Refer to the Instructions for Use supplied with the intratracheal pressure catheter for more information on the use and placement of the catheter.

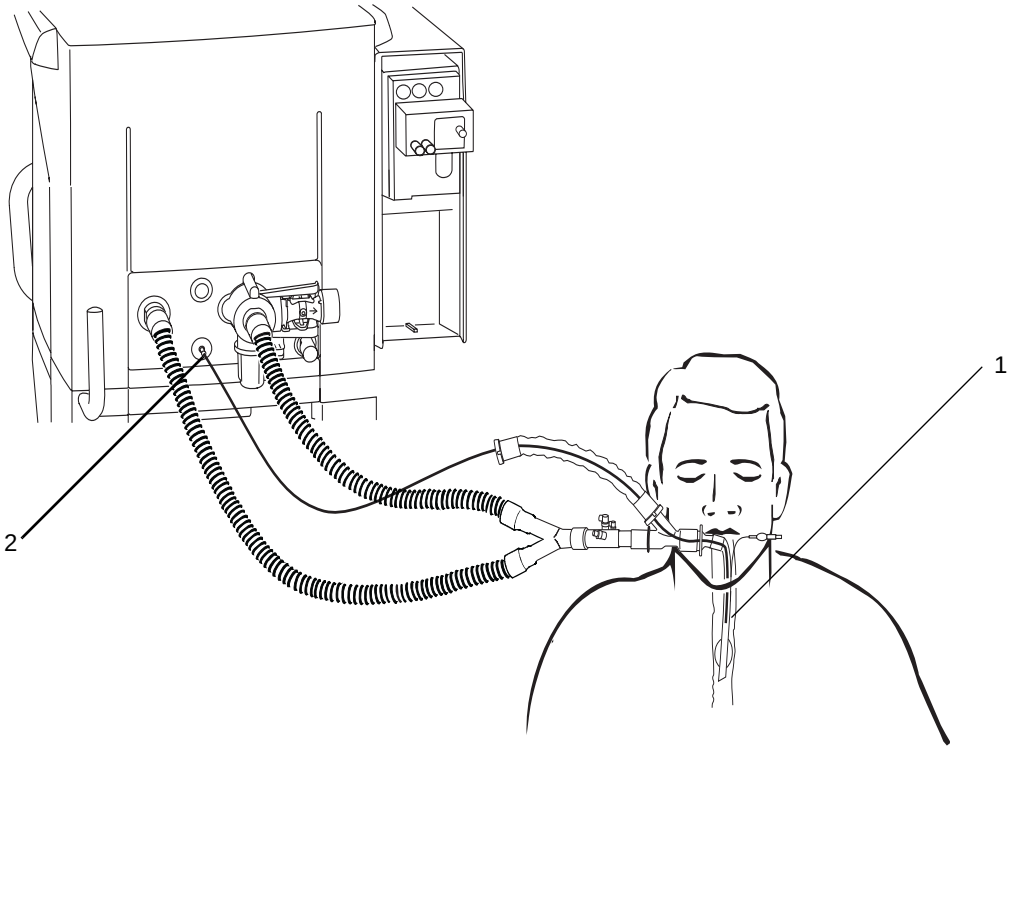

1. Intratracheal pressure catheter
2. Auxiliary pressure port

Figure 12-4 • Catheter connection for SpiroDynamics

Setting up SpiroDynamics

1. Attach the intratracheal catheter connector to the auxiliary pressure port on the system.
2. Push **Spirometry**.
3. Select ***SpiroDynamics - SpiroD Setup***.
4. Set the ***Purge Flow*** to ***On***.

Note A continuous purge flow of approximately 33 ml/min prevents the buildup of mucous inside of the catheter.

5. Select ***Paux Zero*** to zero the pressure sensor. When completed, 'Done' will appear next to ***Paux Zero***.
6. Insert the catheter according to the Instructions for Use provided with the catheter.
7. Set the ***Loop Scale*** to the desired scaling method.
   - Changing the loop scale does not affect the Paux waveform scale.
8. Select ***Previous Menu*** to return to the ***SpiroD*** menu to view the SpiroDynamics loops and curves.

Viewing SpiroDynamics

The SpiroDynamics loops and curves are viewed, saved, and erased through the ***SpiroD*** menu.

The loop and curve is displayed on every third breath when the respiratory rate is 15 or less and on every fifth breath when the respiratory rate is more than 15.

Up to six loop and curve sets can be saved in the memory. Once the memory is full, the second oldest saved set is deleted at the next save. After two or more curves are saved, they can be compared to determine if the patient's compliance has changed and if the inflection points have been minimized.

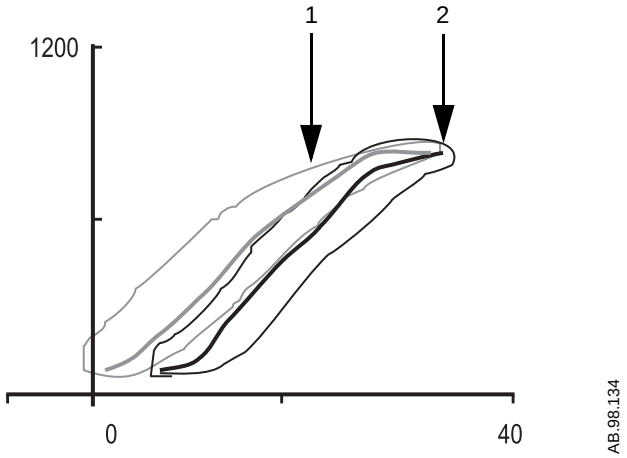

1. Reference loop and curve
2. Real-time loop and curve

Figure 12-5 • SpiroDynamics graph

1. Push **Spirometry** twice to go to the ***SpiroD*** menu.
   - ***SpiroDynamics*** can also be selected from the ***Spirometry*** menu.
2. The real-time loop and curve show in the graph. Three compliance values, Peak, PEEPe, and Raw show below the graph.
   - The SpiroD curve shows as the thicker line.
3. Select ***Save Current*** to save the loop and curve of the displayed breath.
   - The first saved loop and curve becomes reference 1.
   - If a loop and curve is displayed as reference 1, the next saved loop and curve becomes reference 2.
   - After saving six references, the next save overwrites the second oldest reference. If this reference is a displayed reference, it is replaced with 'None' until the next save.
4. To show a specific reference, select the reference to be changed and the time of the reference to display. The references display in a different color on the graph and in the data area.

5. The reference can be shown in the graph with both the loop and curve or just the loop or just the curve.
   - To show both the loop and the curve for the reference, set ***SpiroD Loops*** to ***On*** and ***SprioD*** curves to ***On***.
   - To show only the loop, set the ***SpiroD Curves*** to ***Off***.
   - To show only the curve, set the ***SprioD Loops*** to ***Off***.
6. To erase a saved reference, select ***Erase Reference*** and the time at which the reference was saved.

Using the cursor

The cursor is an easy way to quickly read the volume and pressure of the SpiroDynamics loop and curve.

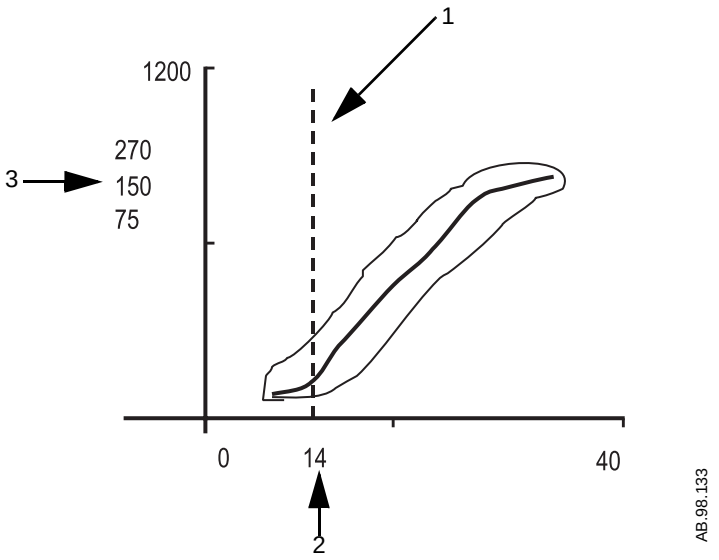

1. Cursor
2. Pressure point of intersection
3. Volume points of intersection

Figure 12-6 • Cursor view

1. In the ***SpiroD*** menu, select ***Cursor***.
2. Turn the ComWheel to move the cursor across the graph.
   - The volume points of intersection show in top to bottom order at the left of the graph.
   - The pressure point of intersection shows below the graph.
3. Push the ComWheel to remove the cursor from the graph.

Lung INview

When SpiroDynamics and FRC are used together, the Lung INview procedure is available.

Lung INview measures the volume between dynostatic curves at the set PEEP levels of the PEEP INview procedure.

When an FRC measurement is taken, data is also taken from the SpiroDynamics loop to obtain information on absolute volume. Comparing the volumes from several dynostatic curves results in a difference that can be estimated as recruited volume.

An intratracheal pressure sensor catheter, an airway module with energy expenditure capabilities, and a D-lite sensor are needed to perform a Lung INview procedure.

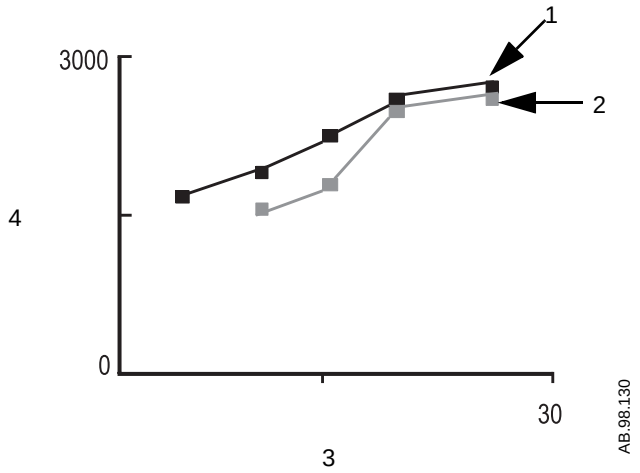

1. PEEP curve
2. PEEP curve minus the difference between SpiroDynamic dynostatic curves
3. PEEP axis
4. FRC volume axis

Figure 12-7 • Lung INview graph

Using Lung INview

1. Set up SpiroDynamics according to the "*Setting up SpiroDynamics"* procedure.
2. Push **Spirometry**.
3. Select ***SpiroDynamics - PEEP INview***.
4. Set ***Lung INview*** to ***On***.
5. Set the ***FRC O2***, ***Initial PEEP***, ***End PEEP***, and ***Measurements*** according to the *"PEEP INview"* procedure.
6. Select ***Start***.
   - The menu item changes to ***Stop***.
   - The measurements begin.
   - A white dot is plotted on the graph at each FRC value.

- At each PEEP, the FRC and airway resistance is measured and a SpiroDynamics loop is saved. (Saved loops are for calculation only and are not displayed.)
- The dynostatic curve from the measurement at the PEEP setting is compared to the dynostatic curve taken from the previous PEEP setting. A yellow dot is plotted on the graph showing the difference.
- The Set PEEP, FRC, Difference, and Raw values show below the graph.

7. To stop an active Lung INview procedure, select ***Stop***.

Troubleshooting

Symptom	Problem	Solution
FRC data shows as dashes.	FRC calculation was interrupted.	Check that the airway module is functioning and the ventilation parameters are constant. Perform another FRC Procedure. Do not change any ventilation settings or perform any procedures that alter the ventilation settings while an FRC procedure is active.
PEEP INview data shows as dashes.	FRC calculation was interrupted.	Check that the airway module is functioning and the ventilation parameters are constant. Perform another FRC Procedure. Do not change any ventilation settings or perform any procedures that alter the ventilation settings while an FRC procedure is active.
SpiroDynamic data shows as dashes.	Data calculation was interrupted.	Check that the catheter is setup correctly.
The entire FRC INview graph does not show.	The scaling is not set properly.	Set the FRC scaling to ***Auto*** or a larger scale in the ***FRC Scaling*** menu.
The Lung INview procedure only shows one curve in the graph.	The catheter reading is not correct.	Check that the catheter is set up properly and is attached to the system.
The Phigh setting changes during a PEEP INview procedure.	If the active mode is BiLevel, the PEEP Inview procedure alters the Plow setting instead of the PEEP. The difference originally set between the Plow and Phigh is maintained during a PEEP INview procedure.	Change the Phigh setting prior to performing a PEEP INview procedure. Ensure that the difference between the Plow and Phigh is acceptable for the entire range of the PEEP as set for the PEEP INview procedure.
The SpiroDynamics real-time loop and curve are not showing in the graph.	The catheter reading is not correct.	Check that the catheter is set up properly and is attached to the system.
The ***Start*** PEEP INview menu item is disabled.	The airway module is not installed. The airway module is not warmed up. Another procedure is active.	Insert the airway module. Allow the airway module to warm up. The menu item will enable when the conflicting procedure is completed.
The ***Start Single*** and ***Start Series*** FRC INview menu items are disabled.	The airway module is not installed. The airway module is not warmed up. Another procedure is active.	Insert the airway module. Allow the airway module to warm up for at least 30 minutes prior to use. The menu item will enable when the conflicting procedure is completed.
There is a large variance in the measurements during a single FRC procedure.	The airway module may not be fully warmed up.	Allow the airway module to warm up for at least 30 minutes prior to use.
FRC or PEEP INview terminates before it begins calculation.	The airway module detects artifacts in the VO2 or VCO2 readings or the bias flow is too high to properly calculate VO2 or VCO2.	Add a straight t-adapter between the D-lite and the patient wye to reduce the effect of bias flow on the measurements. Lower the bias flow setting. Use a 2-meter CO2 sample line.

Alarms

Message	Priority	Potential Cause	Action/Concerns
Cannot calculate FRC	Informational	The last attempted FRC measurement could not be completed.	Ventilation setting changes stop an FRC measurement. Ensure the airway module is available and active. Stop any active procedures. Start a new FRC measurement.
FRC series stopped	Informational	The O2 setting was changed during an FRC series interval to within 10% of the FRC O2 setting.	An FRC series will stop if at least a 10% difference is not maintained.
Missed scheduled FRC	Informational	A series FRC measurement could not be started.	Ventilation setting changes stop an FRC measurement. Ensure the airway module is available and active. Stop any active procedures. The FRC measurement will attempt at the next scheduled interval.

13 Neonatal Option

In this section

Neonatal ventilation 13-2
Symbols 13-3
Neonatal flow sensor 13-3
Preparing the ventilator for a patient 13-7
Performing procedures 13-9
INview ventilation tools 13-9
Alarms 13-10
Troubleshooting 13-11
Trends 13-11
Neonatal specifications 13-12

Neonatal ventilation

The neonatal option on the Engstrom Carestation provides ventilation for intubated neonatal patients weighing down to 0.5 kg. This is accomplished by using a proximal flow sensor at the patient wye which connects to the ventilator with a cable. This sensor allows the ventilator to deliver flows as low as 0.2 l/min and as high as 30 l/min.

Several features are included with the neonatal option:

- The calculated tidal volume per unit of weight is displayed while adjusting the tidal volume setting.
- The volume delivered per unit of weight can be displayed in the digit field for continuous monitoring.
- Safety related limits have been imposed on ventilation settings and alarm limits for the intended patient population.
- The patient's weight can be set in the Vent Setup or Patient Setup menus.

Information presented in other sections of this manual will apply to all patient types, including neonatal. Exceptions are detailed in this section.

Theory of operation

The system operates on a flow control basis during the inspiratory phase of pressure modes and volume modes where the calculated inspiratory flow is more than 2 l/min. The system drives the flow control valves to deliver flow directly to the patient. In volume modes, when the calculated inspiratory flow is less than 2 l/min, the system operates in a continuous flow manner and diverts gas to the patient by interrupting the bias flow using exhalation valve control.

The neonatal flow sensor operates using hot wire anemometry principles whereby a wire having a large temperature to electrical resistance relationship is placed in the stream of gas flow. Two hot wires are present within this device and a small metallic post is positioned between the hot wires allowing flow direction to be determined. This sensor is used to monitor flow trigger levels, control volume delivery, and measure inspired and expired tidal volumes.

Important The neonatal flow sensor is required for all modes except PCV.

When the neonatal flow sensor is turned off, the inspiratory phase of supported breaths will end if airway pressure exceeds (PEEP + Psupp + 2.5 cmH2O), or if the max Tinsp is reached. The End Flow setting is not used. Supported breaths have a maximum inspiratory time of 0.8 seconds.

Symbols

The symbols defined in the *"Introduction"* section also apply to the neonatal option. When the neonatal patient type is active on the EC, a symbol will appear in the upper right corner of the display. ***Neonatal*** will appear below the clock. This symbol will also appear in specific data areas when the Neo Flow Sensor is turned On.

Neonatal mode is active

Neonatal flow sensor

Use the ***Neo Flow Sensor Setup*** menu to manually calibrate or turn the neonatal flow sensor off.

Neo Flow Sensor Setup	
Neo Flow Sensor On	On or Off
Neo Flow Sensor Cal	
Previous Menu	

The neonatal flow sensor is specifically developed for use with neonatal patients and allows proximal volume control, volume monitoring, and flow monitoring.

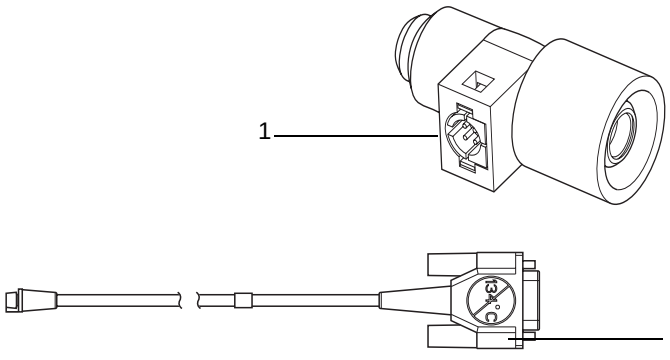

Item	Description	Stock Number
1	Neonatal flow sensor	1505-3272-000
2	Neonatal flow sensor cable	1505-5604-000

Connecting the flow sensor

1. Attach the neonatal flow sensor cable connector to port 1 on the back of the EC.

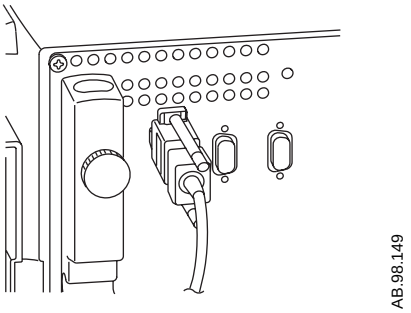

2. Connect the neonatal flow sensor to the cable.

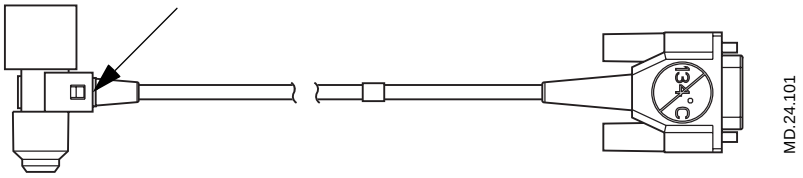

3. Connect the neonatal flow sensor to the patient breathing circuit.

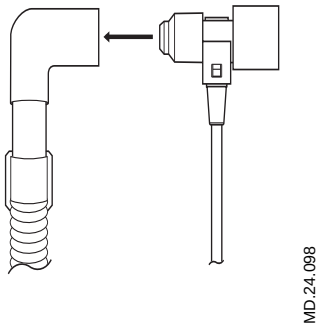

4. Connect the neonatal flow sensor to the patient airway.

Turning the flow sensor off

The system will default to show information from the neonatal flow sensor in the neonatal option.The neonatal flow sensor can be removed to perform specific procedures (for example, nebulization). The sensor should be turned off if it is removed from the patient circuit.

If the neonatal flow sensor is turned off or the cable is disconnected, the Trigger will automatically change to -0.5 cmH_2O if it was set above 0 cmH_2O.

WARNING Volume control, volume monitoring, and flow monitoring are not available when the neonatal flow sensor is turned off.

To turn the flow sensor off:

1. Select PCV mode, if in Therapy.
2. Push **System Setup**.
3. Select ***Neo Flow Sensor Setup***.
4. Select ***Neo Flow Sensor***.
5. Select ***Off***.

Important If the neonatal flow sensor is turned off, the only mode available for ventilation will be PCV.

Calibrating the flow sensor

The neonatal flow sensor can be calibrated automatically through the Checkout procedure, or manually through the ***Neo Flow Sensor Setup*** menu.

Important The flow sensor can only be calibrated when the system is in Standby or when the PCV mode is active.

1. Push **System Setup**.
2. Select ***Neo Flow Sensor Setup***.
3. Select ***Neo Flow Sensor - Off***. The sensor must be disconnected from the patient circuit and not used for monitoring during calibration.
4. Hold the flow sensor between thumb and index finger to occlude both ports simultaneously.

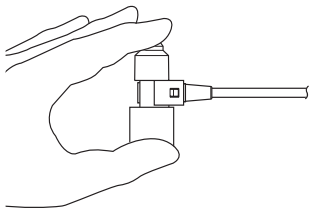

MD.24.102

5. Select ***Neo Flow Sensor Cal***.
6. When complete, ***Pass*** or ***Fail*** will appear next to ***Neo Flow Sensor Cal***.
7. Select ***Neo Flow Sensor - On*** and connect the flow sensor to the patient circuit.

Volume control and monitoring will be more accurate if the neonatal flow sensor is calibrated in the following situations:

- Before use, during the Checkout procedure.
- After replacing the flow sensor.
- After a power cycle.

Cleaning the flow sensor

1. Disconnect the flow sensor from the patient circuit and from the sensor cable.
2. Rinse the sensor immediately after removal.
3. Clean or sterilize flow sensor by using one of the recommended procedures in the *Cleaning and Maintenance* section.
4. Check for cracks or damage, and replace if any defects are visible.
5. Reinstall the flow sensor when dry.
6. Calibrate the flow sensor prior to use on a patient.

Preparing the ventilator for a patient

Follow the procedure as listed in *"Operation and Tutorial"* section. All variations in the procedure due to the neonatal option are detailed below.

Select Patient menu

The ***Select Patient*** menu appears as the first menu when the system starts up. The default patient type is indicated by an arrow. Select ***Neonatal*** for the neonatal settings. After entering neonatal, the system needs to be powered off and on again to select the Adult or Pediatric settings.

Once the ***Patient Setup*** menu item is selected the patient type will be locked.

Important Remove or do not install compact airway modules when Neonatal is selected as the Patient Type. If airway modules are installed, the pumps may be active though any data is disregarded by the EC.

Select Patient

Patient Type:
Adult
Pediatric
Neonatal
Patient Setup

Pre-use checkout

The checkout for neonatal patient types includes a check and calibration of the neonatal flow sensor. Prior to starting the checkout the neonatal flow sensor must be attached to the patient circuit and occluded. The flow sensor can be occluded with the occlusion port, as shown below.

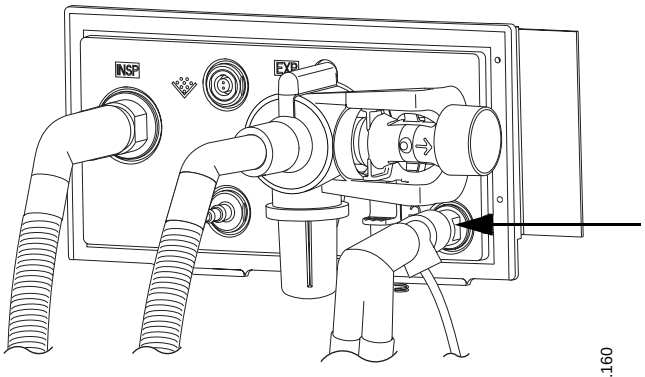

After part of the Checkout is completed, the ***Neo Flow Check*** menu appears on the display and a tone sounds. At this time the occlusion must be removed from the neonatal flow sensor, keeping the flow sensor attached to the patient circuit. The system detects this and automatically continues the checkout. If the flow sensor does not pass the first part of this check, ***Fail*** appears on the ***Checkout*** menu and the ***Neo Flow Check*** menu does not appear.

Testing alarms

The Pmax, minute volume, and low O2 alarms can be tested according to the procedures defined in the *"Operation and Tutorial"* section, using a neonatal patient circuit and test lung.

Apnea alarm test

Due to the sensitivity of the neonatal flow sensor, the apnea alarm should be tested as follows:

1. If not already in VCV mode, select **Vent Setup** - ***VCV - Confirm***. The VCV default settings can be used for this testing.
2. Disconnect the neonatal test lung from the patient circuit.
3. Use the following indicators to verify that the alarm is working correctly:
   - The 'Apnea' alarm appears and sounds.
   - The Respiratory Rate measurement displays 'APN' in a flashing red box.
   - The red LED flashes.
   - 'Apnea' is displayed in red text in the Paw waveform.
4. Connect the neonatal test lung to the patient circuit.
   - Verify the 'Apnea' alarm message changes to white text on a black background indicating that the alarm has been resolved.
   - The alarm tone no longer sounds and the LED turns solid red until **Silence Alarms** is pushed to clear the alarm.

Patient weight

Patient Weight can be set in the ***Patient Setup*** menu or the ***Vent Settings*** menu. Changing the patient weight will have no effect on the settings or the alarms. The Patient Weight will be used to calculate the tidal volume per unit of weight in the Vent Setup menu or quick keys, and to calculate the Volume/Weight measurements in the digit field.

Ventilation preferences menu

The Airway Resistance Compensation (ARC) feature is not available for neonatal patient types.

Performing procedures

↑ O2 and suction

Both the O2 and the suction procedures involve an increase in oxygen. The increase in oxygen will default to either the current O_2 setting + 25%, or 100%, whichever is less.

Nebulizer

The Aeroneb Pro Nebulizer System can be used with neonatal patient types. An adapter is available for neonatal patient circuits. Refer to the *"Parts"* section for more information.

CAUTION To prevent damage to the neonatal flow sensor, remove it from the patient circuit during the delivery of nebulized medication and turn the Neo Flow Sensor Off.

WARNING Volume control, volume monitoring, and flow monitoring are not available when the neonatal flow sensor is turned off.

INview ventilation tools

FRC and SpiroDynamics are not available for use when neonatal patient type is selected.

Alarms

Pushing the **Silence Alarms** key when no medium or high priority alarms are active suspends audible parameter alarm tones for 30 seconds.

The alarms listed below are exclusive to the neonatal mode. Additional alarms and alarm behavior are listed in the *"Alarms and Troubleshooting"* section.

If the corrective action does not resolve the alarm message, contact a Datex-Ohmeda trained service representative.

Message	Priority	Potential Cause	Action/Concerns
Clean neo flow sensor	Medium	Neonatal flow sensor is contaminated with debris.	Clean or replace neonatal flow sensor.
Neo flow sensor error	High	Neonatal flow sensor is not reading correctly.	Check if additional flow is being added to the patient circuit. Clean or replace neonatal flow sensor.
Neo flow sensor Off	Medium	Neo Flow Sensor has been turned Off.	Turn On the neonatal flow sensor in the ***Neo Flow Sensor Setup*** menu. Volume monitoring is disabled while neonatal flow sensor is turned Off. Volume control, volume monitoring, and flow monitoring are not available when the neonatal flow sensor is turned off.
Neo flow sensor reversed	High	Neonatal flow sensor is not installed correctly.	Switch the orientation of the neonatal flow sensor. Reconnect the neonatal flow sensor. Clean or replace neonatal flow sensor.
No neo flow sensor	High	Neonatal flow sensor not connected while ventilating.	Ensure neonatal flow sensor is properly connected. Replace the neonatal flow sensor. Turn off the ***Neo Flow Sensor*** in the ***Neo Flow Sensor Setup*** menu. Volume monitoring is disabled while neonatal flow sensor is disconnected or turned off. Volume control, volume monitoring, and flow monitoring are not available when the neonatal flow sensor is turned off.
No neo flow sensor	Informational	Neonatal flow sensor not connected while in Standby.	Ensure neonatal flow sensor is properly connected. Replace the neonatal flow sensor. Turn Off the ***Neo Flow Sensor*** in the ***Neo Flow Sensor Setup*** menu. Volume monitoring is disabled while neonatal flow sensor is disconnected or turned off. Volume control, volume monitoring, and flow monitoring are not available when the neonatal flow sensor is turned off.
Patient connection leak?	High*	Expired tidal volume < set Leak Limit	Check for leaks at the patient connection of the circuit. Appropriately set the ***Leak Limit*** in the ***Alarms Setup*** menu.

Message	Priority	Potential Cause	Action/Concerns
Remove airway module	Informational	The airway module detected is not compatible with system software.	Remove the incompatible module.
Replace neo flow sensor	High	Ventilator is receiving invalid data from the neonatal flow sensor.	Replace neonatal flow sensor.

*This alarm continues to display an alarm message after the condition has cleared.

Troubleshooting

Symptom	Problem	Solution
Neonatal flow sensor calibration fails.	Neonatal flow sensor is broken, not connected, not properly occluded, or contaminated with debris.	Verify proper connections/ occlusions and recalibrate. Clean or replace neonatal flow sensor.
Only PCV mode is available in the ***Vent Setup*** menu.	The neonatal flow sensor is turned off and only PCV mode is available.	Select **System Setup** - ***Neo Flow Sensor Setup*** - ***Neo Flow Sensor*** - ***On***.
Neo flow sensor check fails.	Neo flow sensor fails.	Clean or replace the neo flow sensor, and ensure sensor cable is properly connected.
	Neo flow sensor is not held steady after occlusion is removed.	Hold flow sensor steady.

Trends

Trend information for neonatal patients varies from the adult/pediatric information. Information is not available from the airway modules for the neonatal option, so trends do not include module-based data.

Graphical trends

The Graphical Trends pages are set with neonatal defaults that are different from adult/pediatric defaults. Selections that are based on the airway module are not available for neonatal trends. The defaults can be changed in the Install/Service menu. See the *"Installation Mode"* section for details.

Neonatal specifications

Most of the specifications for neonatal patient types match those for adult and pediatric patient types. See the *"Specifications"* section for details. Exceptions are listed in the following tables.

Ventilation operating specifications

Ventilation settings

Control	Range	Resolution
Flow	0.2 to 30 l/min	0.2 to 5 by 0.1 l/min 5 to 30 by 0.5 l/min
Flow Trigger	0.2 to 9 l/min	0.2 to 1 by 0.05 l/min 1 to 3 by 0.1 l/min 3 to 9 by 0.5 l/min
Minute Volume	0.05 to 20 l/min	None. Not a direct user setting.
Patient Weight	0.5 to 7 kg	0.1 kg
Rate	3 to 150 /min 2 to 60 /min (SIMV and BiLevel-VG modes only)	1 /min
Thigh	0.1 to 10 s	0.1 to 1.0 by 0.05 s 1 to 4 by 0.1 s 4 to 10 by 0.25 s
Tinsp	0.1 to 10 s	0.1 to 1 by 0.05 s 1 to 4 by 0.1 s 4 to 10 by 0.25 s
Tlow	0.25 to 30 s	0.25 to 1 by 0.05 s 1 to 4 by 0.1 s 4 to 30 by 0.25 s
Tpause	0 to 7.5 s	0 to 1 by 0.05 s 1 to 4 by 0.1 s 4 to 7.5 by 0.25 s
TV	3 to 350 ml	3 to 50 by 0.5 ml 50 to 100 by 1 ml 100 to 350 by 5 ml

Ventilation delivery specifications

Tidal volume delivery

Mixture accuracy is measured at one meter from the outlet port.

Accuracy	± 10% of setting or ± 1 ml, whichever is greater
1σ repeatability	± 2% or ± 1 ml, whichever is greater
Change response time 90% full scale (FS)	<6 breaths

Inspiratory and expiratory resistance

The inspiratory and expiratory resistance does not exceed 6 cmH_2O for flow at 5 l/min when used with the Fisher & Paykel infant breathing circuit (RT131) and humidification chamber (MR225).

Ventilator monitoring specifications

Measurements

Measurements	Range	Resolution	Filtering Technique	Accuracy
MVexp MVinsp MVspont	0 to 99.9 l/min	0.01 to 1.0 by 0.01 l/min 1.0 to 99.9 by 0.1 l/min	Running value for the last one minute + one breath.	See TV accuracy
TVexp TVinsp TVspont	0.1 to 9999 ml at flows between 0.1 and 3 l/min	0.1 to 9.9 by 0.1 ml 10 to 9999 by 1 ml	Value from the last detected breath.	± 10% or ± 1 ml, whichever is greater
RR RRspont	0 to 999/min	1/min	Running value for the last one minute + one breath.	± 1/min
Compl	1 to 999 ml/cmH_2O	0.1 ml/cmH_2O	Five breath median filter. After an inspiratory hold procedure, static compliance will be displayed for 5 breaths.	---

Alarm settings

Alarm	Range	Default
Low MVexp	0.01 to 10 l/min	0.2 l/min
High MVexp	0.01 to 40 l/min	0.4 l/min
Low TVexp	Off, 2 to 350 ml	Off
High RR	2 to 150/min, Off	Off

Index

Numerics

100% O2 4-21

A

Abbreviations 1-6
AC power cords 9-3
Airway modules 5-2
  calibration 5-8
  cleaning 5-9
  compatibility 5-2, 11-10
  connections 5-4
  maintenance 7-4
  parts 9-5
Airway Resistance Compensation 4-10, 13-8
Alarm limits 4-12, 4-16
  default limits 4-17
  FiO2 settings 4-13
  leak limit 4-17
Alarms
  display 6-3
  FRC 12-16
  listing 6-4
  neonatal 13-10
  priorities 6-2
  testing 4-4, 13-8
Alarms Setup 2-16
Arm
  support 3-13
Assist control 4-10
Auxiliary pressure 3-9
  purging 3-10

B

Backup mode
  changing settings 4-9
  selecting 4-9
Battery
  information 11-3
  performance test 7-3
Bias flow 4-8

C

Checkout
  failure 4-3
  how-to 4-2
  neonatal 13-7
Cleaning 7-5
Compressor 3-15
  cleaning 7-11
  controls 3-16
  electrical block diagram 11-14
  operation 4-26
  parts 9-5
  pneumatic diagram 11-13
  pre-use check 3-17
  specifications 11-12
ComWheel 2-6

D

Data source
  selecting 4-13
Default settings 10-9
D-fend 5-3, 7-12
Disinfection 7-5
Display
  configuration 2-23
  controls and indicators 2-6
  fields 2-8
  ventilator 2-8

E

EC
  accessories 1-3
  calibration 10-10
  suggested use 1-2
Electrical outlets 3-14
End flow 4-8
Energy expenditure 5-6
Exhalation valve
  cleaning 7-6
  housing 2-2, 2-3
  latch 2-2, 2-3
  parts 9-2

Expiratory filter 3-3, 3-7
Expiratory flow sensor 2-2
  cleaning 7-6
Expiratory hold 4-24

F

Fan filter
  cleaning 7-7
  display 2-4
  ventilator unit 2-4
FiO2 4-8
Flow 4-8
Flow sensor
  neonatal 13-3
FRC 12-2
  log 12-7
  performing 12-2
  scaling 12-4
  theory 12-2

G

Gas connections 3-5
Gas exchange 5-6

H

Help 2-7
Holds 4-24
Humidifier 3-2
  mounting bracket 3-11
  setup 3-11

I

I to E 4-8
Insp pause 4-8
Inspiratory hold 4-24
Install/Service
  menu 10-2
  password 10-2
Intrinsic PEEP 4-23

L

Leak compensation 4-11
Loops 4-19
Lung INview 12-13
  using 12-13

M

Maintenance
  compressor 7-4
  schedule 7-4
  user 7-2
Manual breath 4-22
Menus
  display 2-9
  listing 2-14
  select patient 13-7
  use of 2-10
Mode selection 4-7
Modes 8-3
  BiLevel airway pressure ventilation 8-14
  BiLevel airway pressure ventilation - volume guaranteed 8-20
  Pressure controlled ventilation 8-6
  Pressure controlled ventilation - volume guaranteed 8-8
  Synchronized intermittent mandatory ventilation - pressure controlled 8-12
  Synchronized intermittent mandatory ventilation - pressure controlled volume guaranteed 8-18
  Synchronized intermittent mandatory ventilation - volume controlled 8-10
  Volume controlled ventilation 8-4
Module
  Continuous positive airway pressure/ pressure support ventilation 8-16
Module bay 2-2
  connection 2-4
Module bay, connection 3-4
Monitoring 4-15

N

Nebulizer
  Aeroneb Pro 3-7
  cleaning 7-9
  connection 2-2, 3-8
  filling 3-8, 3-9
  instructions 4-22
  setup 3-7
  T-adapter 3-7

Neonatal 13-2
flow sensor 13-3
theory of operation 13-2
Nurse call 3-6

P

P 0.1 4-23
Patient type 4-6
Patient weight 4-6, 13-8
PEEP 4-8
PEEP INview 12-5
PEEPi volume, P Vol 4-23
Phigh 4-8
Pinsp 4-8
Plimit 4-8
Plow 4-8
Pmax 4-8
Power connection 3-3
Procedures 4-21
menu 2-22
Psupp 4-8
PSV rise time 4-8

Q

Quick keys 2-6

R

Rate 4-8
Repair policy 7-2
Rise time 4-8

S

SBT 4-25
Settings 4-16
Silence Alarms 6-2, 13-10
Snapshots 4-17
taking 4-17
viewing 4-17
Specifications
airway module 11-10
compressor 11-12
electrical 11-3
environmental 11-2
neonatal option 13-12
physical 11-2
pneumatic 11-2
ventilation delivery 11-5, 11-7
ventilation operating 11-5
ventilator monitoring 11-9
SpiroDynamics 12-8
cursor 12-12
setting up 12-10
theory 12-8
viewing 12-11
Spirometry
displaying loops 4-19
menu 2-21
menu functions 4-20
split screen 4-20
Spontaneous Breathing Trial 4-25
Standby 4-15
Sterilization 7-5
Suction 4-21, 13-9
Support arm, cleaning 7-10
Symbols 1-3
neonatal 13-3

T

Thigh 4-8
Tinsp 4-8
Tlow 4-8
Trends
displaying 4-18
menu 2-23
neonatal option 13-11
split screen 4-18
Trig window 4-8
Trigger 4-8
Trigger compensation 4-11
Troubleshooting 6-10
INview ventilation tools 12-15
neonatal option 13-11
TV 4-8
TV based on 4-12

V

Ventilation
setting mode 4-7
setting preferences 4-9
settings 4-7
soft limit indicators 4-7
starting 4-14
stopping 4-15
theory 8-2
ventilation 13-2

Ventilation modes
BiLevel 8-14
CPAP/PSV 8-16
PCV 8-6
PCV-VG 8-8
SIMV-PC 8-12
SIMV-VC 8-10
VCV 8-4
Ventilation settings 4-16
Ventilator
lock 2-2, 2-3
settings 2-8
unit 2-2

W

Water trap
D-fend 7-12
exhalation valve 2-2

Warranty

This Product is sold by Datex-Ohmeda under the warranties set forth in the following paragraphs. Such warranties are extended only with respect to the purchase of this Product directly from Datex-Ohmeda or Datex-Ohmeda's Authorized Dealers as new merchandise and are extended to the Buyer thereof, other than for the purpose of resale.

For a period of twelve (12) months from the date of original delivery to Buyer or to Buyer's order, but in no event for a period of more than two years from the date of original delivery by Datex-Ohmeda to a Datex-Ohmeda Authorized Dealer, this Product, other than its expendable parts, is warranted against functional defects in materials and workmanship and to conform to the description of the Product contained in this User's Reference manual and accompanying labels and/or inserts, provided that the same is properly operated under the conditions of normal use, that regular periodic maintenance and service is performed and that replacements and repairs are made in accordance with the instructions provided. This same warranty is made for a period of thirty (30) days with respect to expendable parts. The foregoing warranties shall not apply if the Product has been repaired other than by Datex-Ohmeda or in accordance with written instructions provided by Datex-Ohmeda, or altered by anyone other than Datex-Ohmeda, or if the Product has been subject to abuse, misuse, negligence, or accident.

Datex-Ohmeda's sole and exclusive obligation and Buyer's sole and exclusive remedy under the above warranties is limited to repairing or replacing, free of charge, at Datex-Ohmeda's option, a Product, which is telephonically reported to the nearest Datex-Ohmeda Customer Service Center and which, if so advised by Datex-Ohmeda, is thereafter returned with a statement of the observed deficiency, not later than seven (7) days after the expiration date of the applicable warranty, to the Datex-Ohmeda Customer Service and Distribution Center during normal business hours, transportation charges prepaid, and which, upon Datex-Ohmeda's examination, is found not to conform with above warranties. Datex-Ohmeda *shall not be otherwise liable for any damages including but not limited to incidental damages, consequential damages, or special damages.*

There are no express or implied warranties which extend beyond the warranties hereinabove set forth. Datex-Ohmeda makes no warranty of merchantability or fitness for a particular purpose with respect to the product or parts thereof.

Engström Carestation
User's Reference Manual,
English, US Variant
M1073130
05 07 14 14 04
Printed in USA
©Datex-Ohmeda, Inc.
All rights reserved

CE
0197